RFID/USN Technologies (2)
: IEEE 802.15.4 & ZigBee

November, 2007

JinSoo Park

Advanced Technology Laboratories
R & D Division, KT

Contents

Why do we need ZigBee?

- There are a multitude of standards that address mid to high data rates for voice, PC LANs, video, etc. However, up till now there hasn't been a wireless network standard that meets the unique needs of sensors and control devices. Sensors and controls don't need high bandwidth but they do need low latency and very low energy consumption for long battery lives and for large device arrays.
- There are a multitude of proprietary wireless systems manufactured today to solve a multitude of problems that also don't require high data rates but do require low cost and very low current drain.
- These proprietary systems were designed because there were no standards that met their requirements. These legacy systems are creating significant interoperability problems with each other and with newer technologies.

Characteristics

- Simple to develop and deploy
- Flexible networking that can automatically (or under network control) adjust to fit the physical characteristics
- Optimized for applications requiring
  - Low cost
  - Low data rate
  - Long battery life
  - Robust security
  - High data reliability
  - Product interoperability

History

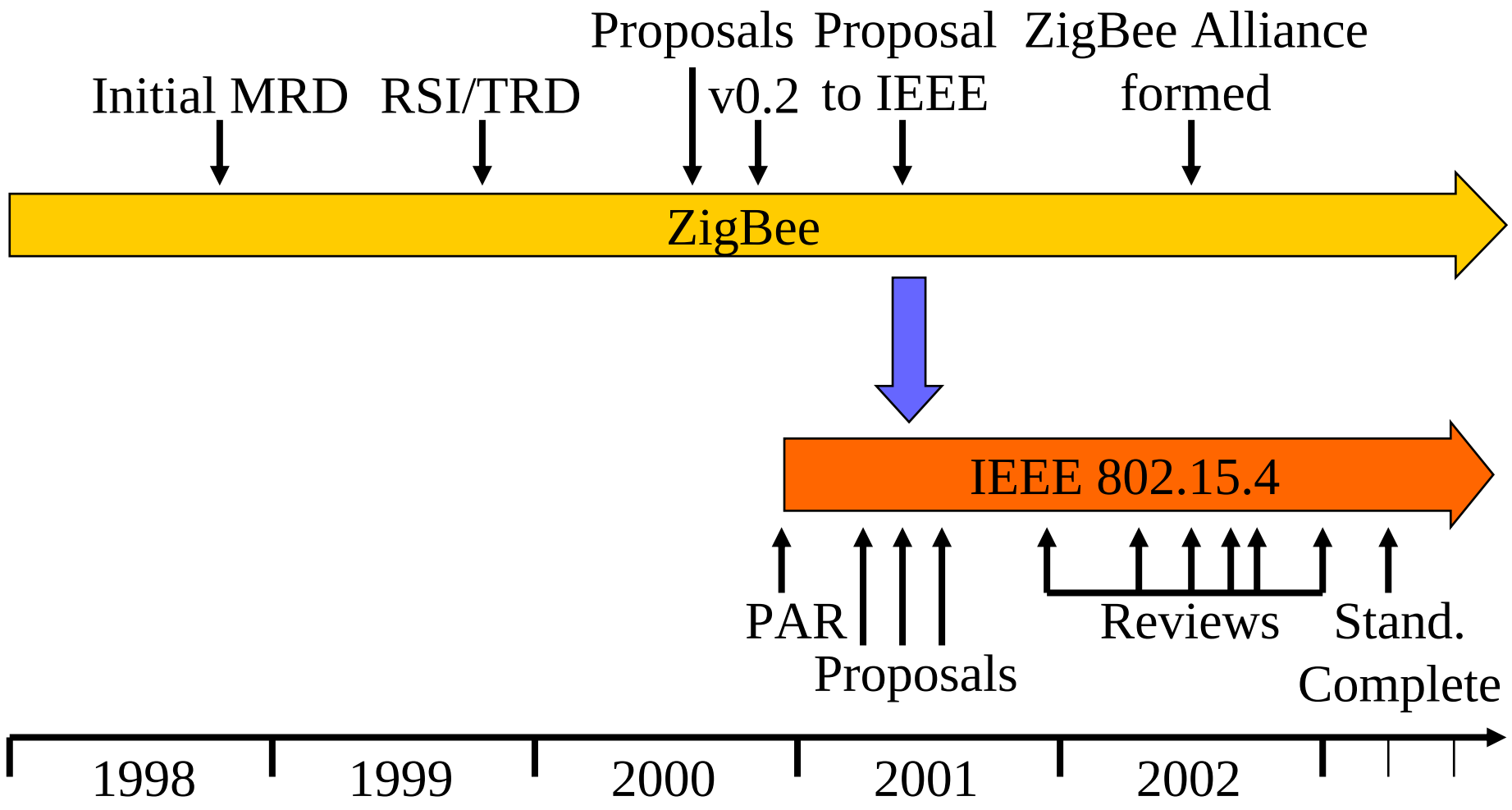

MRD: Market Requirements Document

Applications

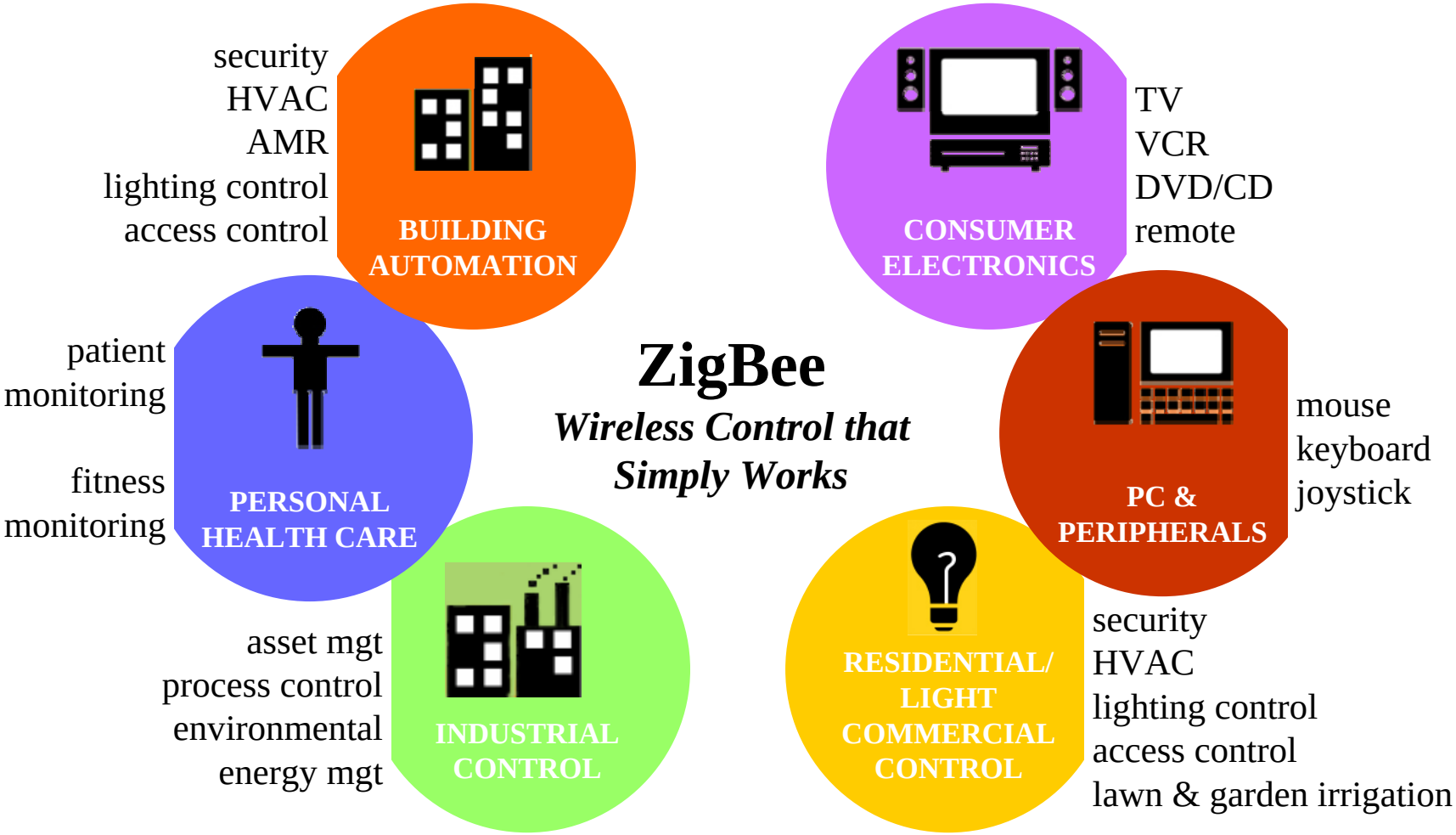

ZigBee Stack

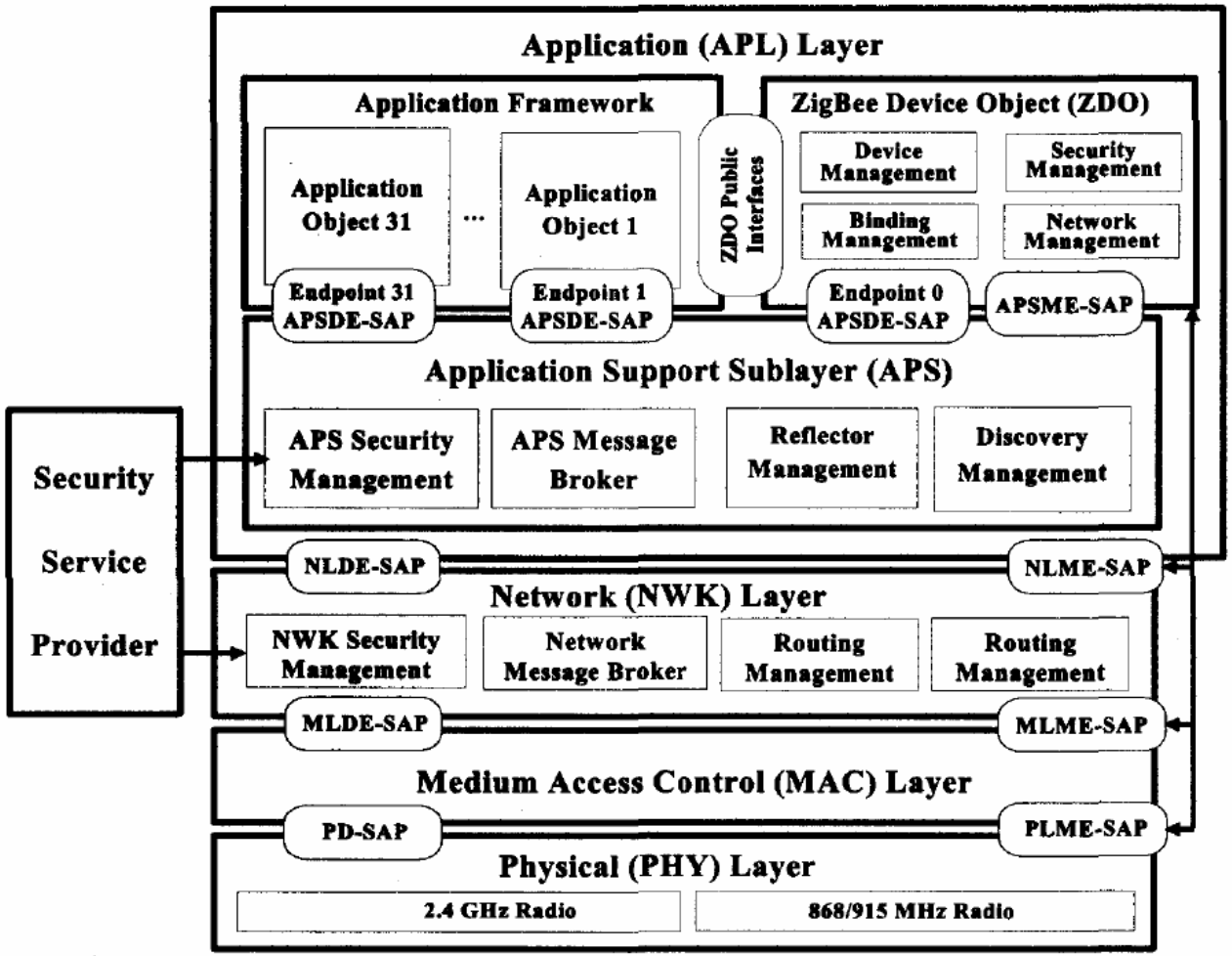

PHY & MAC 구조

- IEEE 802.15.4 MAC/PHY spec
  - Air Interface
    - DSSS- 11 chips/ symbol
    - 62.5 K symbols/s
    - 4 Bits/ symbol
    - Peak Information Rate: ~128 Kbit/second
  - MAC
    - Employs 64-bit IEEE & 16-bit short addresses
      - Ultimate network size can reach 264 nodes (more than we' ll probably need…)
      - Using local addressing, simple networks of more than 65,000 (2^16) nodes can be configured, with reduced address overhead
    - Three devices specified
      - Network Coordinator
      - Full Function Device (FFD)
      - Reduced Function Device (RFD)
    - Simple frame structure
    - Reliable delivery of data
    - Association/disassociation
    - AES-128 security
    - CSMA-CA channel access
    - Optional superframe structure with beacons
    - GTS mechanism

PHY & MAC 구조

- **IEEE 802.15.4 MAC/PHY characteristics**
  - ❖ 250Kbps, 40Kbps, 20Kbps전송속도 지원
  - ❖ Star or Peer-to-peer operation
  - ❖ 16 비트 혹은 64비트 주소 할당
  - ❖ GTS (Guaranteed Time Slot)의 할당
  - ❖ CSMA-CA를 이용한 다중접속
  - ❖ 전송 신뢰성 보장을 위한 ACK지원
  - ❖ Low Power Consumption
  - ❖ Energy detection 기능
  - ❖ 수신된 패킷의 특성을 나타내기 위한 LQI (Link Quality Indication)사용
  - ❖ 2450MHz대역에서 16개 채널 사용(O-QPSK이용, 250Kbps지원), 915MHz대역에서 10개 채널 사용(BPSK이용 40Kbps지원), 및 868MHz대역에서 1개의 채널 사용 가능 (BPSK 이용 20Kbps지원)

PHY & MAC 구조

IEEE 802.15.4 PHY layer 패킷 구조

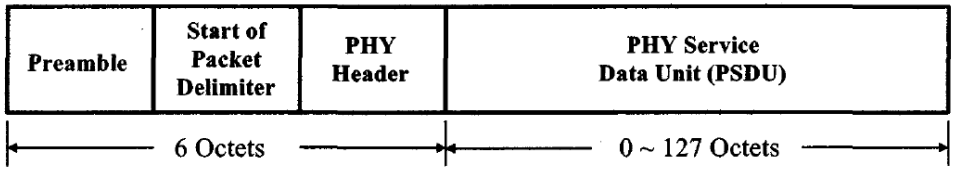

- Preamble: 트랜시버에서 입력되는 메시지 동기화
- SoP(Start of Packet) Delimiter: 패킷 데이터의 시작
- Header: 8(7+1)비트, PSDU정보 저장

PHY & MAC 구조

IEEE 802.15.4 MAC Frame format

- Preamble: 트랜시버에서 입력되는 메시지 동기화
- SoP(Start of Packet) Delimiter: 패킷 데이터의 시작
- Header: 8(7+1)비트, PSDU정보 저장

Octet: 2	1	0/2	0/2/8	0/2	0/2/8	variable	2
Frame Control	Sequence Number	Destination PAN Identifier	Destination Address	Source PAN Identifier	Source Address	Frame Payload	FCS
		Addressing Fields					
MHR						MAC Payload	MFR

Bits:0-2	3	4	5	6	7-9	10-11	12-13	14-15
Frame Type	Security Enabled	Frame Pending	Ack. Request	Intra-PAN	Reserved	Dest. Addressing Mode	Reserved	Source Addressing Mode

Frame Type: “000” for Beacon type, “001” for Data type, “010” for ACK type, “011” MAC command type
MLME-SAP: MAC Layer Management Entity

PHY & MAC 구조

Data Frame Format

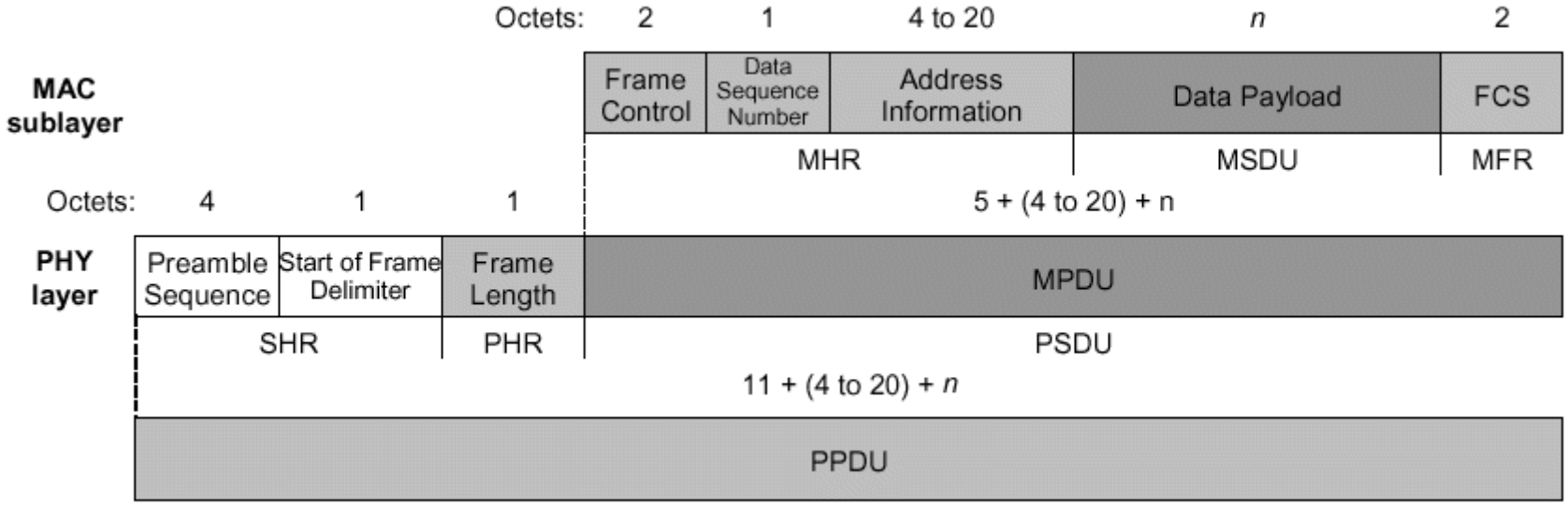

- One of two most basic and important structures in 15.4
- Provides up to 104 byte data payload capacity
- Data sequence numbering to ensure that all packets are tracked
- Robust frame structure improves reception in difficult conditions
- Frame Check Sequence (FCS) ensures that packets received are without error

Acknowledgement Frame Format

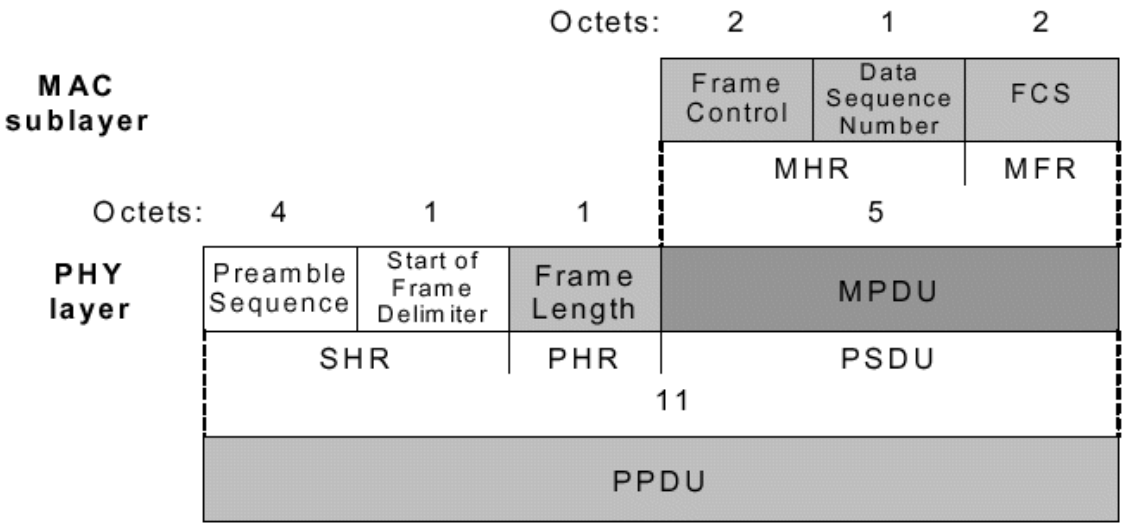

- The other most important structure for 15.4
- Provides active feedback from receiver to sender that packet was received without error
- Short packet that takes advantage of standards-specified "quiet time" immediately after data packet transmission

PHY & MAC 구조

MAC Command Frame format

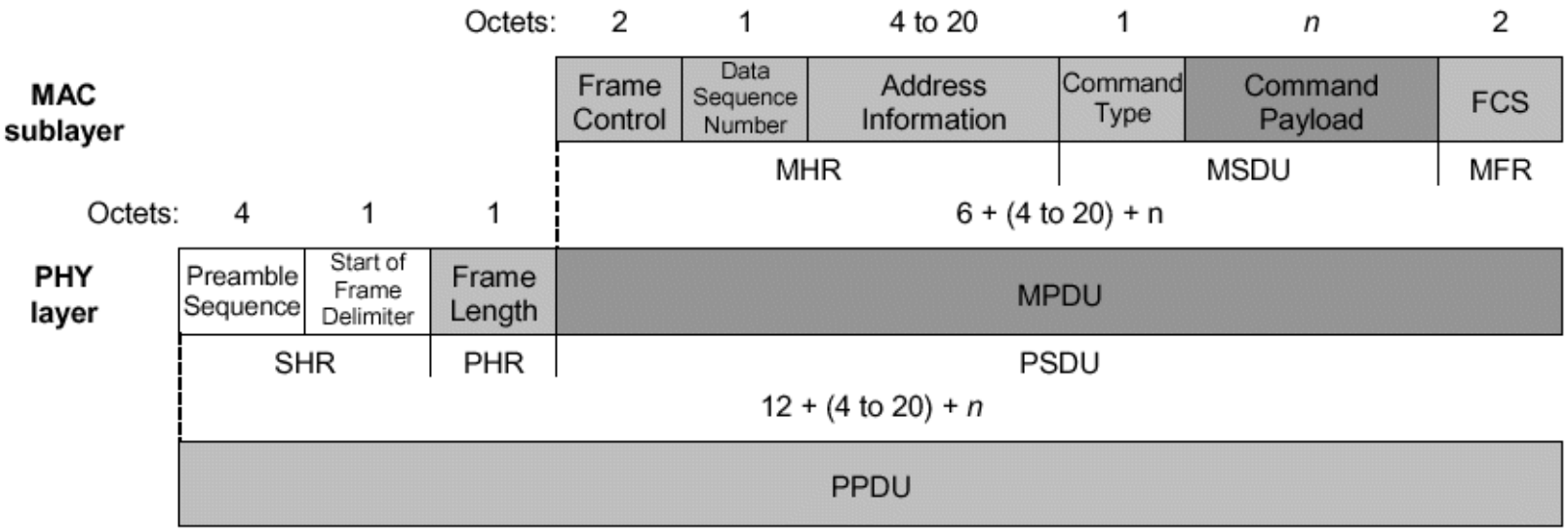

- Mechanism for remote control/configuration of client nodes
- Allows a centralized network manager to configure individual clients no matter how large the network

Beacon Frame format

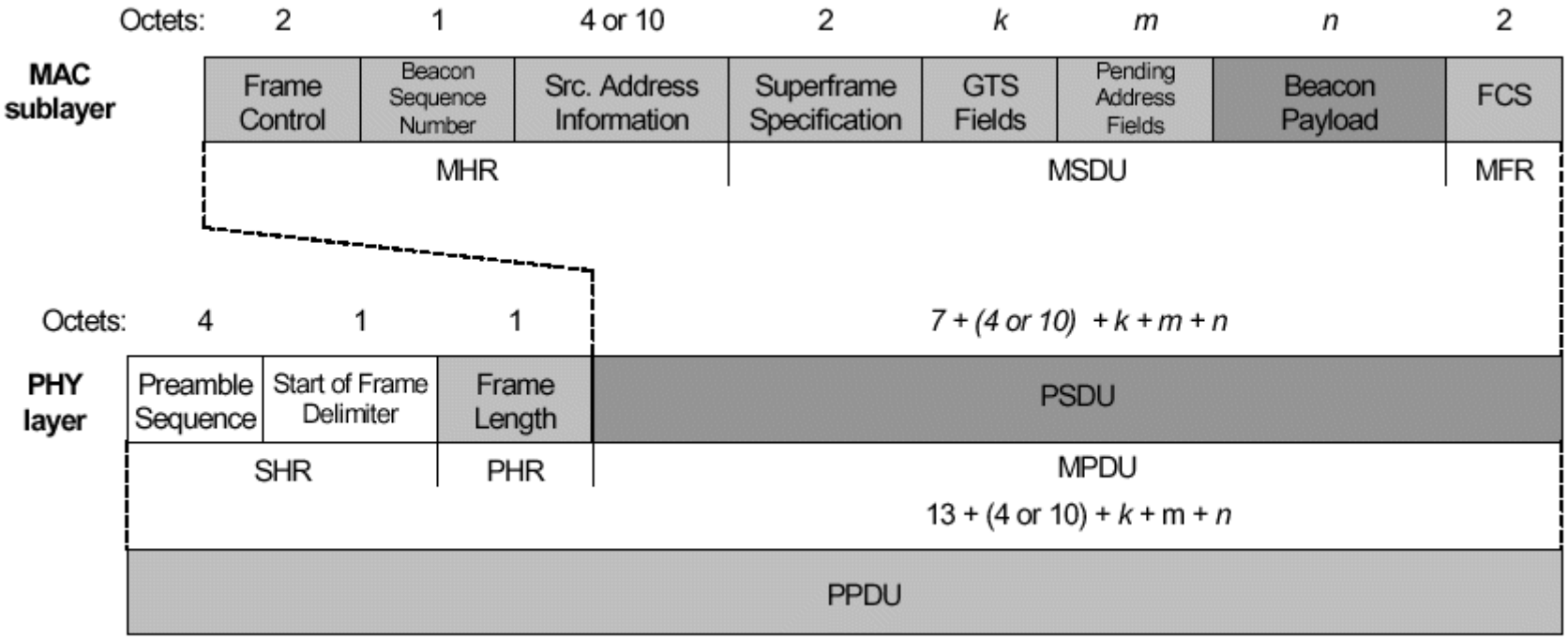

- Beacons add a new level of functionality to a network
- Client devices can wake up only when a beacon is to be broadcast, listen for their address, and if not heard, return to sleep
- Beacons are important for mesh and cluster tree networks to keep all of the nodes synchronized without requiring nodes to consume precious battery energy listening for long periods of time

PHY & MAC 구조

Reference model and primitives

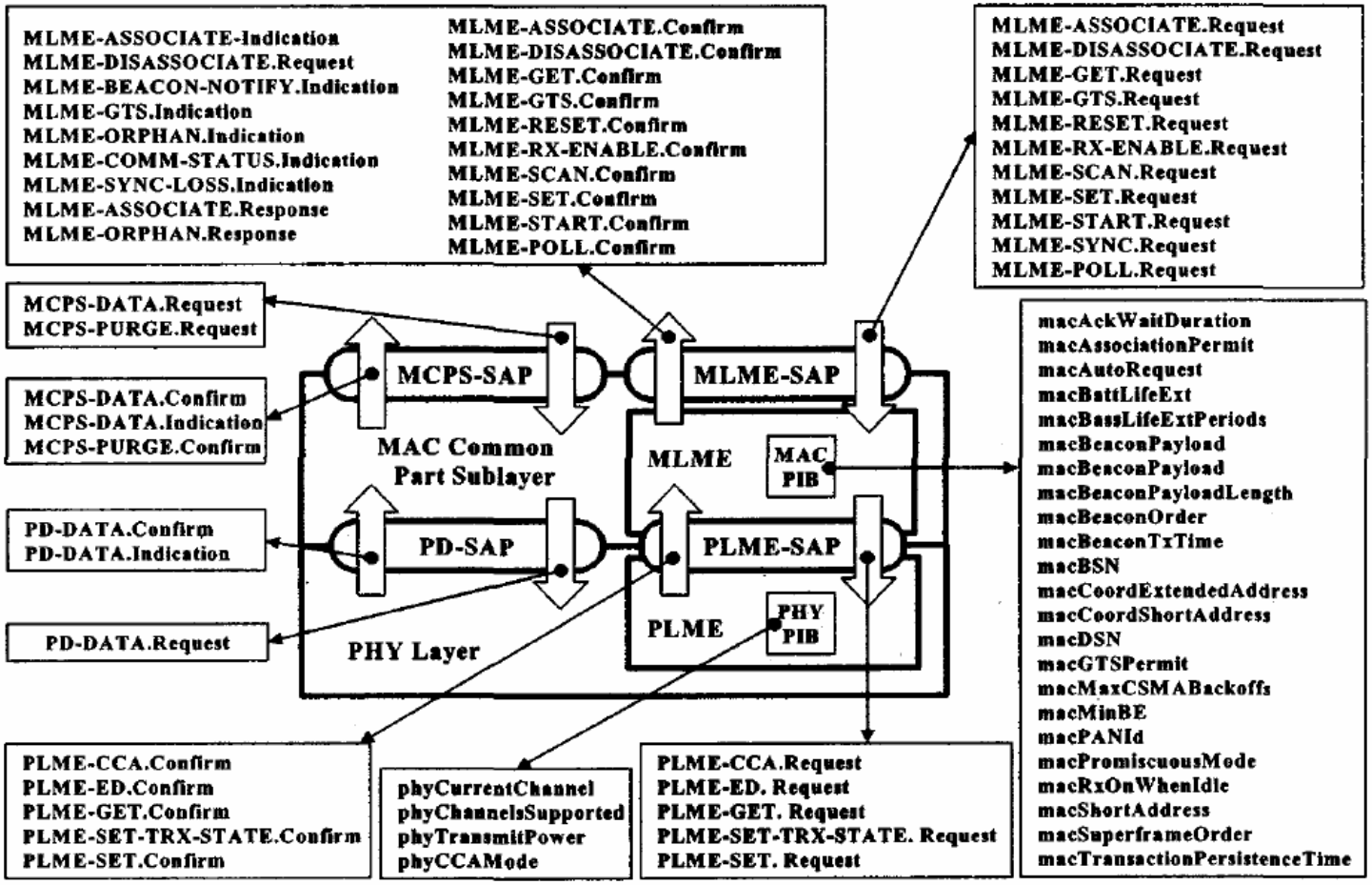

MCPS-SAP: MAC Common Part Sublayer
MLME-SAP: MAC Layer Management Entity

Network Topologies

- Network topology : star topology and peer-to-peer topology
  - Star topology
    - PAN coordinator controls all communications among devices and the devices communicates through PAN coordinator.
  - Peer-to-peer topology
    - Any device may communicate with any other device as long as they are in range of one another.

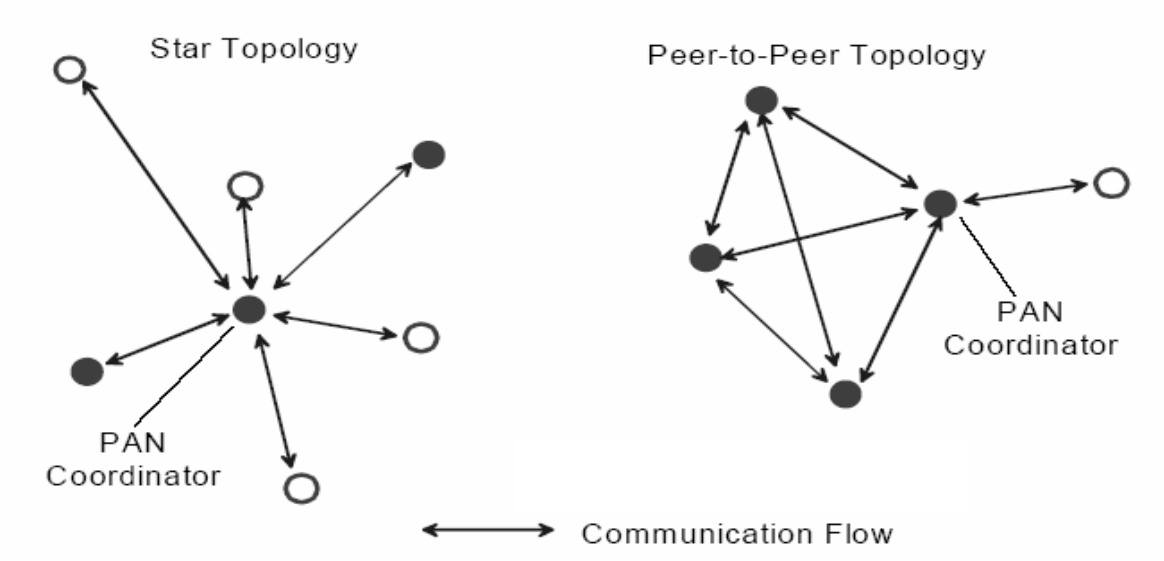

Superframe 구조

Superframe구조

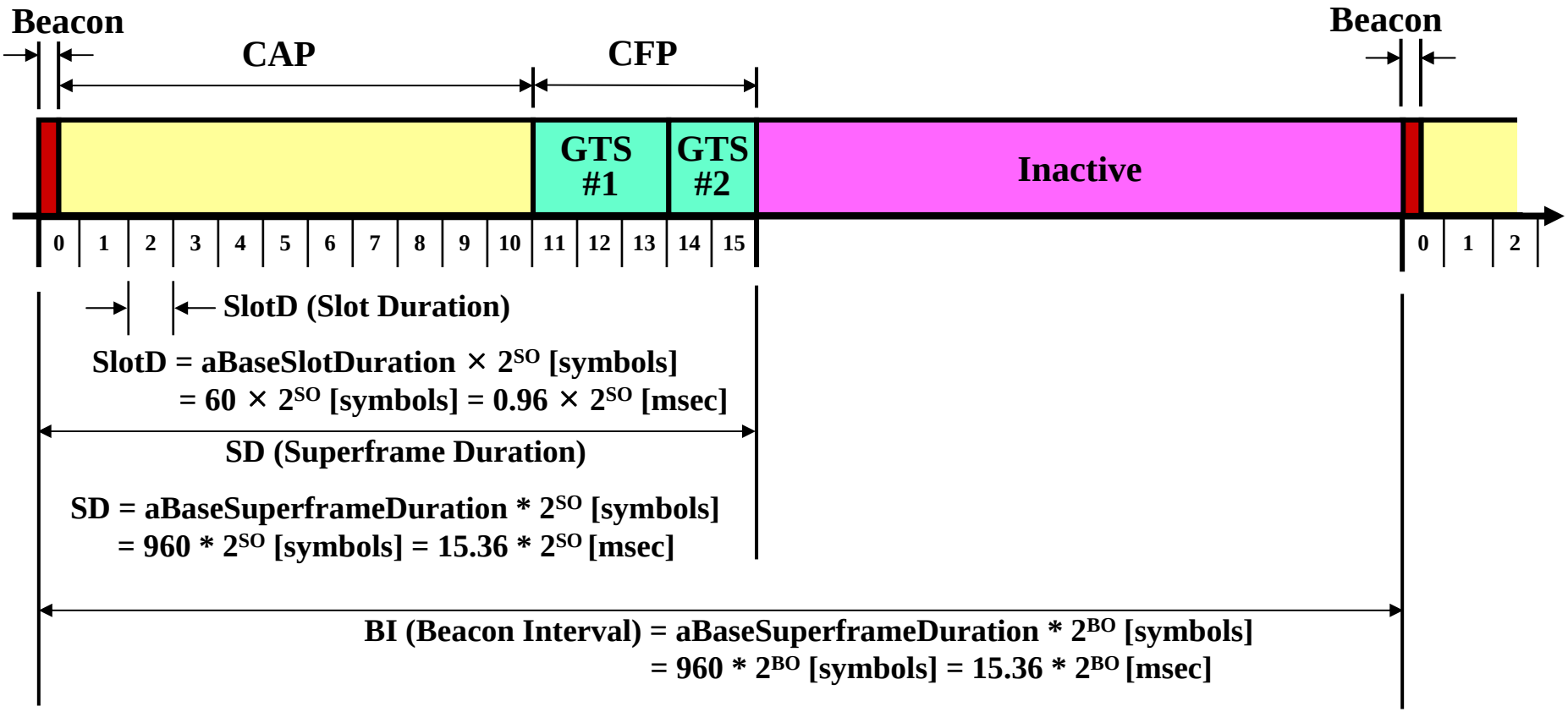

SO: Super-frame order
BO: Beacon order, MAC PIB에 저장된 macBeaconOrder로서 0~14

Multiple Access (Superframe structure)

- The superframe is bounded by network beacons sent by the coordinator and is divided into 16 equally sized slots. Any device wishing to communicate during the contention access period (CAP) competes with other devices using a slotted CSMA-CA mechanism.

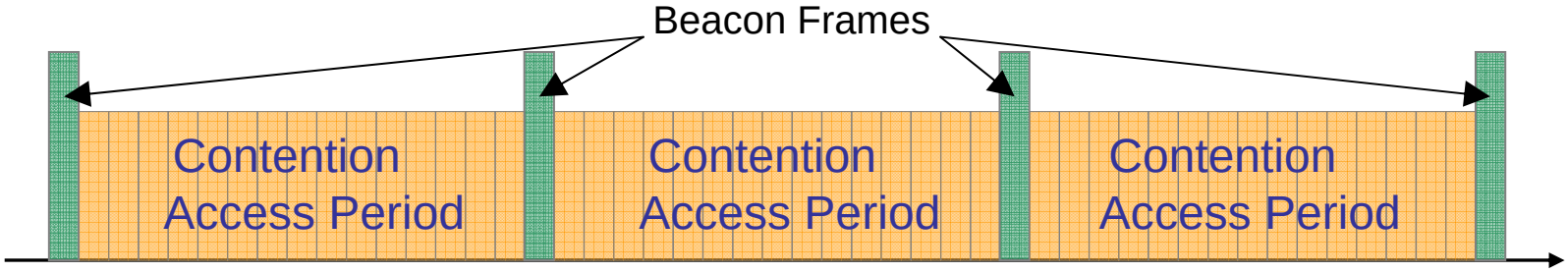

- The superframe can have an active and an inactive portion. During the inactive portion, the coordinator may enter a low-power mode.

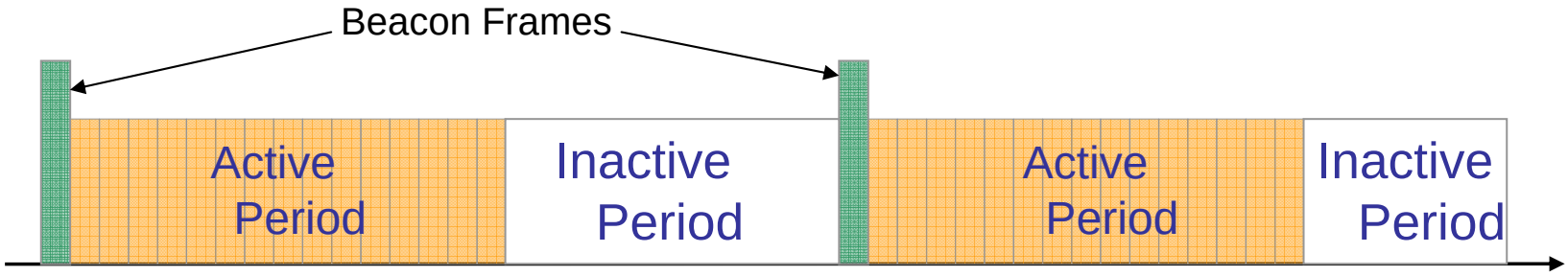

Superframe structure

- For low-latency applications or applications requiring specific data bandwidth, the PAN coordinator may dedicate portions of the active superframe to that application. These portions are called guaranteed time slots (GTSs). The GTSs form the contention-free period.

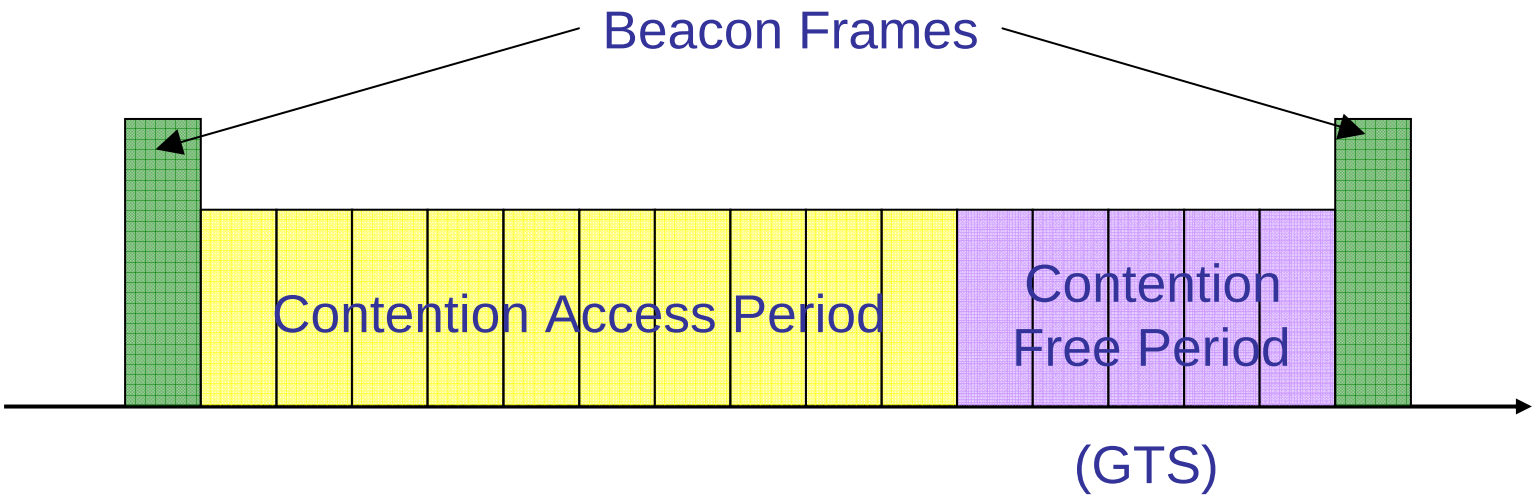

CSMA-CA Algorithm

❑ CSMA-CA in IEEE 802.15.4

❍ Beacon mode (Slotted CSMA-CA)

- Communication is controlled by the network coordinator, which transmits regular beacons for device synchronization and network association control.

❍ Non-beacon mode (Unslotted CSMA-CA)

- A network node can send data to the coordinator at will using CSMA-CA.
- To receive data from the coordinator the node must power up and poll the coordinator.

CSMA-CA Algorithm

❑ Slotted CSMA-CA (Beacon mode)

❍ All frames in the CAP use slotted CSMA-CA

- NB : number of backoff stage permitted before declaring channel access failure
  - Can be set between 0 and 5
- CW : contention window length (only used in slotted CSMA/CA)
  - The number of backoff period that need to be clear of channel activity before the transmission can commence
- BE : backoff exponent
  - The MAC sublayer shall delay for a random number of complete backoff periods in the range 0 to $2^{BE}-1$
  - $0 \leq BE \leq 5$ with minimum initial permitted value between 0 and 3 inclusive. (default minimum value =3)

CSMA-CA Algorithm

- Slotted CSMA-CA (Beacon mode)
  - Step (2)

    generate a random waiting time ‘j’ in [0,2BE-1] and the value of ‘j’ is decremented by 1 at every backoff period
  - Step (3)

    perform CCA on backoff period boundary
  - Step (4)

    the channel is busy at CCA, then increase NB by 1 and return to step 2
  - Step (5)

    the channel is idle at CCA, then the MAC shall first decrement CW by one and determine whether it is equal to zero. If it is equal to zero, then MAC begins transmission. Otherwise, return to step 3 and perform CCA again.

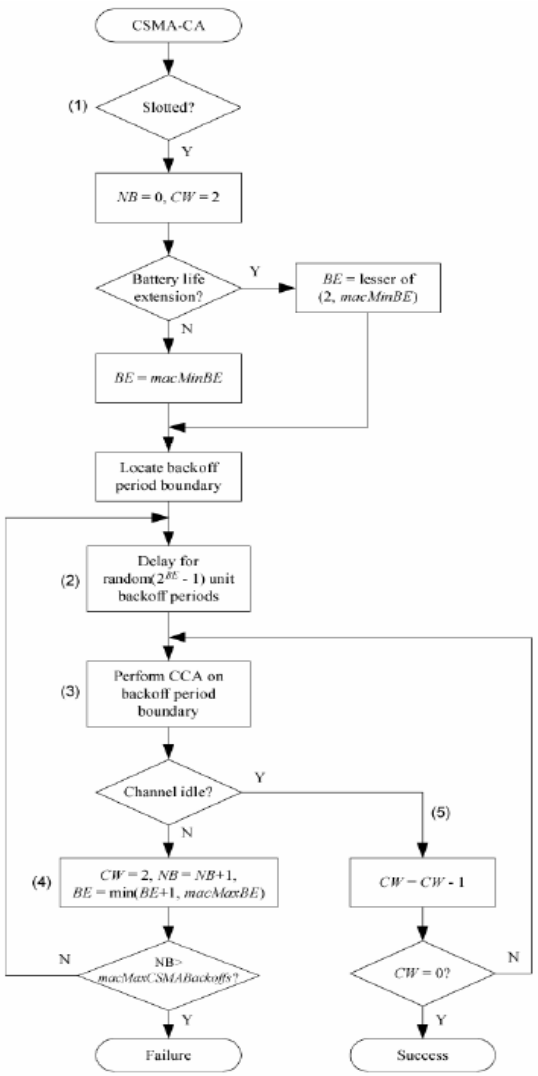

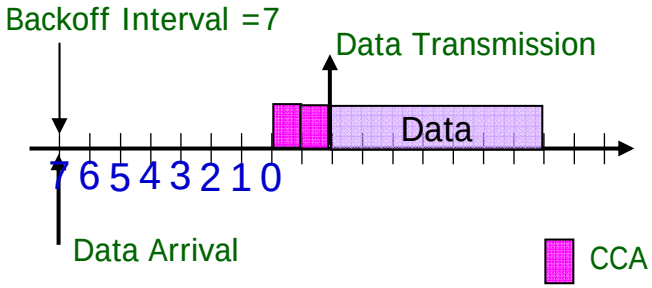

CSMA-CA Algorithm

- Unslotted CSMA-CA (Non-beacon mode)
  - Step (2)

    generate a random waiting time ‘j’ in [0,2BE-1] and the value of ‘j’ is decremented by 1 at every backoff period
  - Step (3)

    perform CCA
  - Step (4)

    the channel is busy at CCA, then increase NB by 1 and return to step 2
  - Step (5)

    the channel is idle at CCA, then transmit the packet. If collision with other devices does not occur, then the transmission is success. If collision occurs then return to step 1

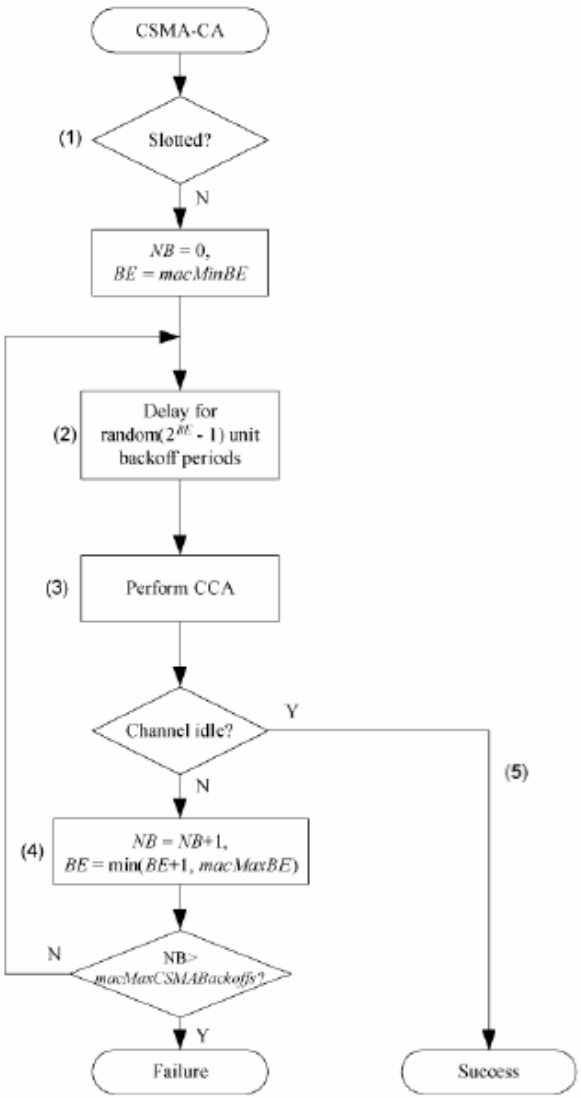

Data transfer method

- **Upload Procedure in Beacon Mode**

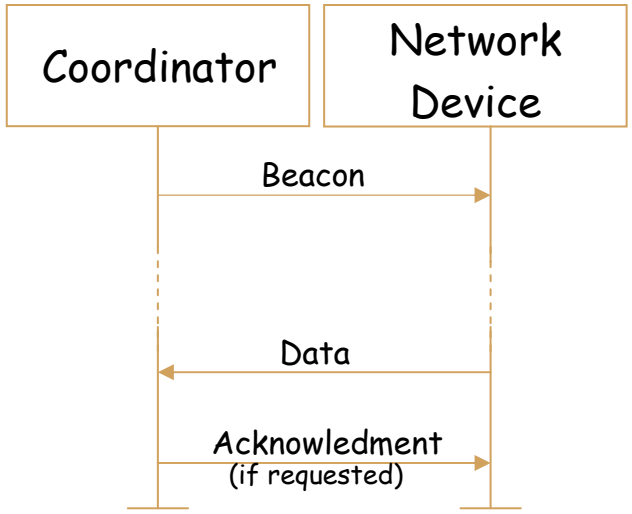

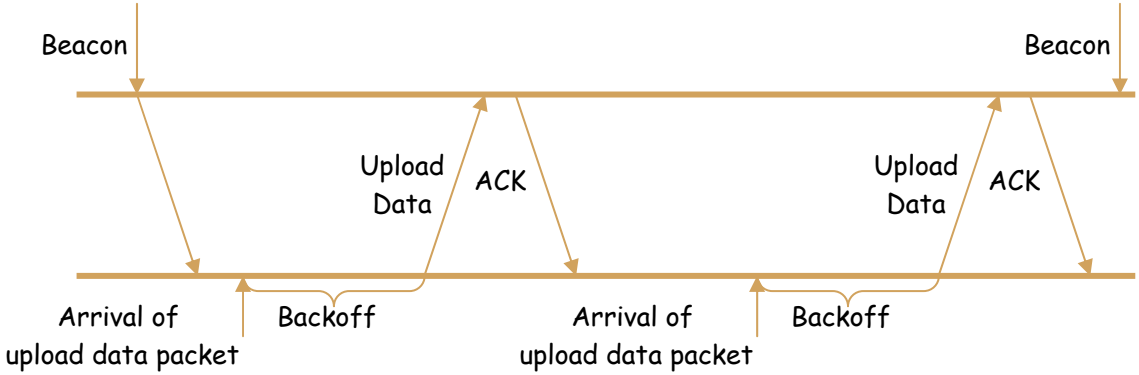

1. It listens for the network beacon and the device synchronizes to the superframe structure.
2. Device transmits its data frame using CSMA-CA, to coordinator.
3. The coordinator may acknowledge the successful reception of the data by transmitting an optional acknowledgment frame.

Data transfer method

- **Upload Procedure in Non-beacon Mode**

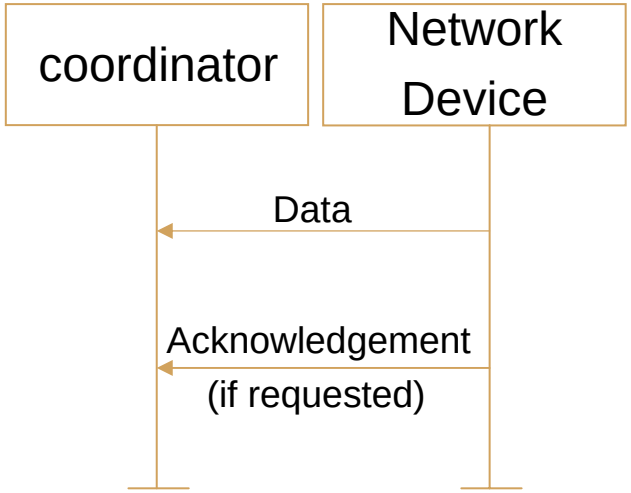

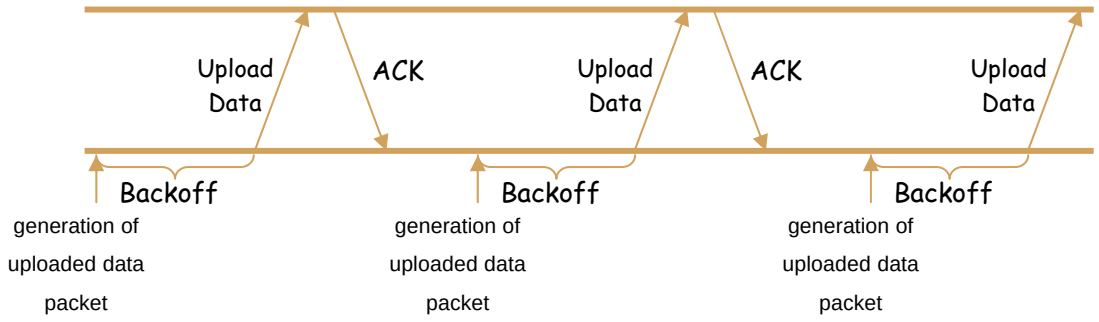

1) The device transmits its data frame, using unslotted CSMA-CA, to the coordinator.
2) The coordinator acknowledges the successful reception of the data by transmitting an optional acknowledgment frame.

Data transfer method

- **Download Procedure in Beacon Mode**

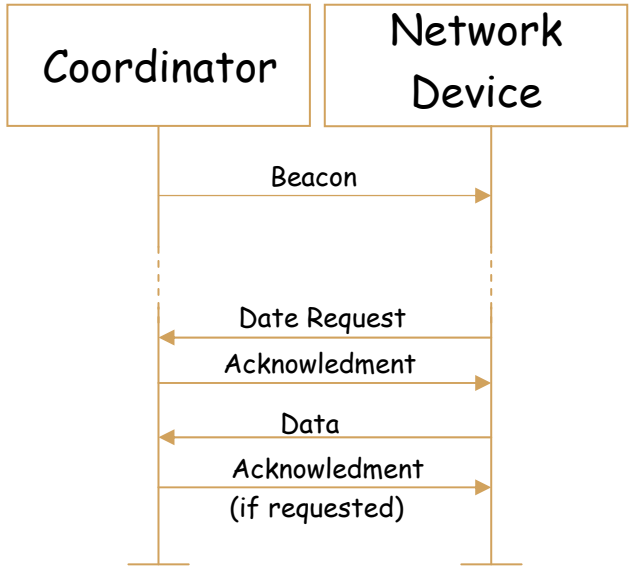

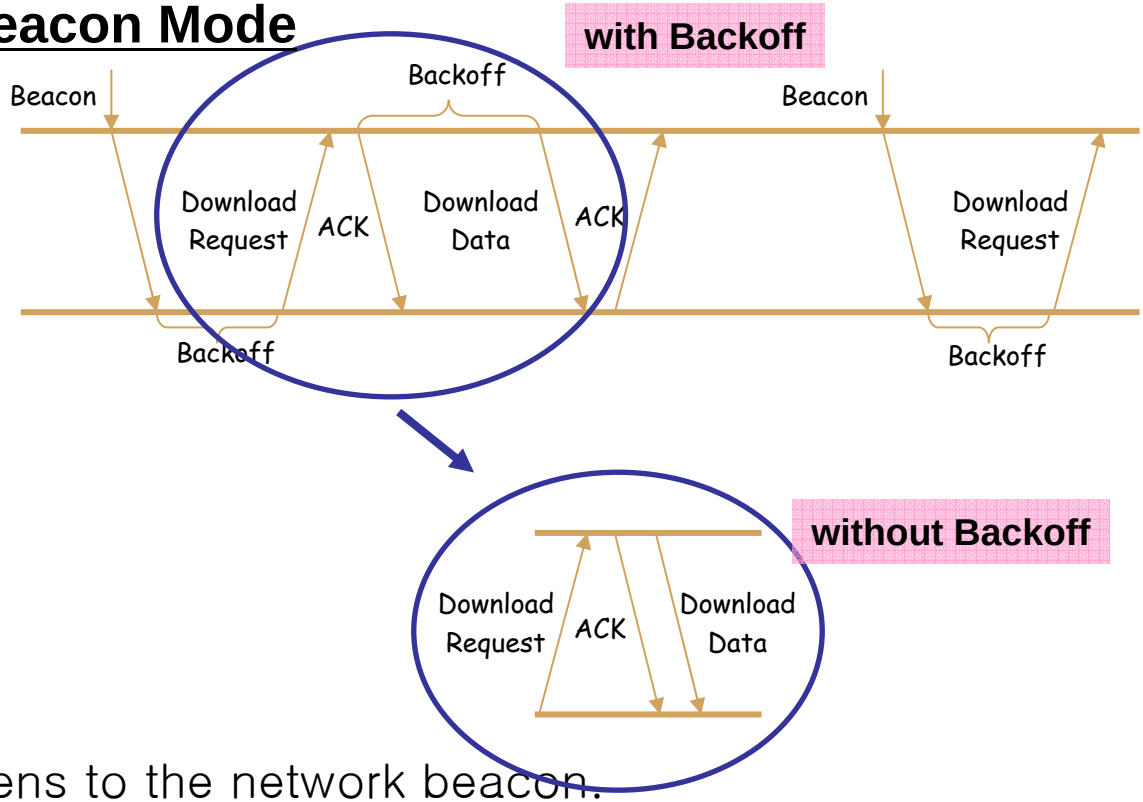

1) The device periodically listens to the network beacon.
2) If a message is pending, the device transmits a MAC command requesting the data using CSMA-CA.
3) The coordinator acknowledges the successful reception of the data request by transmitting an acknowledgement frame.
4) The pending data frame is sent with CSMA-CA or without CSMA-CA
5) The device may acknowledge the successful reception of the data.

Data transfer method

- **Download Procedure in Non-beacon Mode**

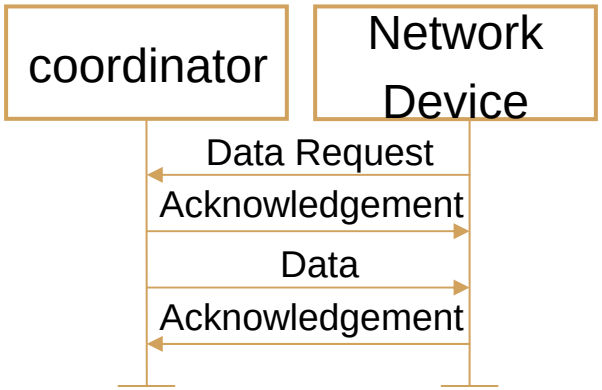

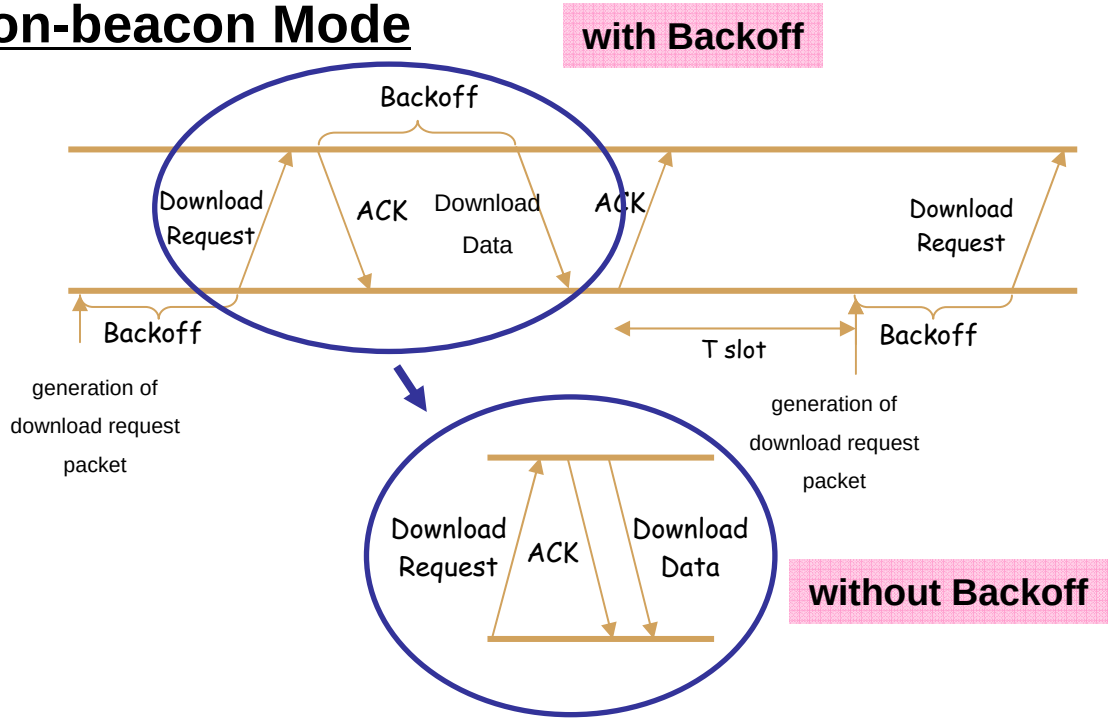

1) A device may contact by transmitting a MAC command requesting the data, using unslotted CSMA-CA.
2) The coordinator acknowledges the successful reception of the data request by transmitting an acknowledgment frame.
3) If a data frame is pending, the coordinator transmit the data frame using unslotted CSMA-CA, to the device.
4) If requested, the device acknowledges the successful reception of the data frame by transmitting an acknowledgment frame.

Comparison of WLAN and WPAN

Comparison of IEEE 802.11 WLAN and IEEE 802.15.4 LR-WPAN

- IEEE 802.11 WLAN ↔ IEEE 802.15.4 LR-WPAN

IEEE 802.11 WLAN		IEEE 802.15.4 LR-WPAN
Station	↔	Device (or Sensor Node)
Access Point (AP)	↔	PAN coordinator
Contention Period (DCF)	↔	Contention Access Period (CAP)
Contention Free Period (PCF)	↔	Contention Free Period (CFP,GTS)

Comparison of WLAN and WPAN

- To protect ACK frame

IEEE 802.11 WLAN		IEEE 802.15.4 LR-WPAN
SIFS (<DIFS)	↔	CCA
Freezing	↔	no freezing
(awake mode always)		(sleep mode for power saving)
No corresponding notion	↔	CW
$CW=2^{BE}$	↔	2^{BE}

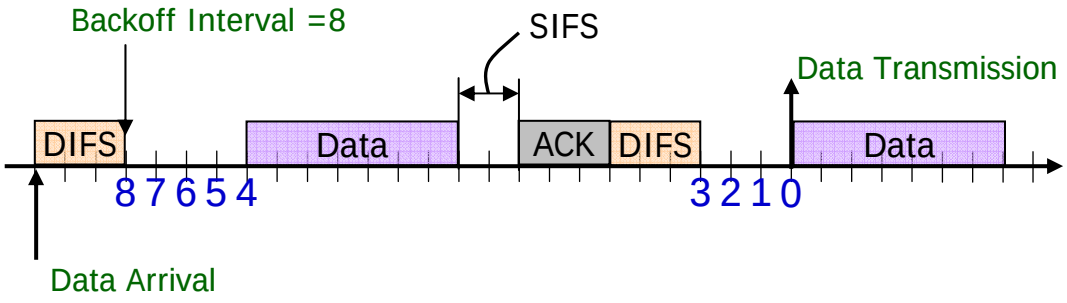

WLAN

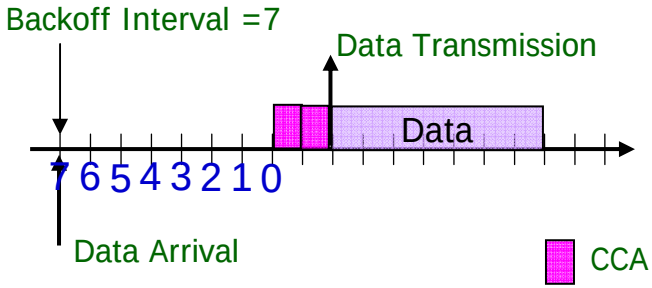

WPAN

Upload Procedure in Non-beacon Mode

Performance Analysis

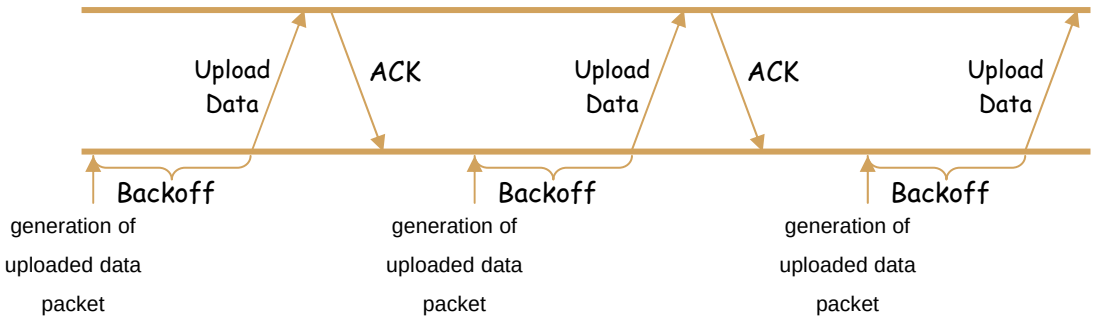

1) The device transmits its data frame, using unslotted CSMA-CA, to the coordinator.
2) The coordinator acknowledges the successful reception of the data by transmitting an optional acknowledgment frame.

Mathematical model

- Assumptions of analysis for upload procedure
  - The arrival of each upload packet in idle state follows a Bernoulli process with probability P_{idle}
  - The length of a packet measured in slots is geometrically distributed with mean $\frac{1}{1-P_{Tx}}$

- Markov chain for upload procedure

$s(t)$: the number of backoff (NB) at time t

; $0 \leq s(t) \leq M$ where M is $macMaxCSMABackoffs - 1$

$b(t)$: the backoff counter or transmission counter of the sensor device

Tx: the state of packet transmission which includes the duration for waiting and receiving ACK

idle: the state in which the sensor device does not have any packet to transmit

Mathematical model

Define $X(t)$ by

$$X(t) = \begin{cases} (s(t), b(t)), & \text{when a device is in the process of backoff steps} \\ \mathbf{Tx}, & \text{when a device is in the process of packet transmission} \\ \mathbf{idle}, & \text{when a device is in the idle state} \end{cases}$$

at t.

⇨ $X(t)$ is a discrete Markov chain

Let $\pi_{i,j}$, π_{Tx} and π_{idle} be the steady-state probabilities for this Markov chain

Analysis for Upload Procedure

Performance Analysis

Mathematical model

Diagram of one-step transition probabilities

$$P_s = P\{\text{successful transmission} \mid \text{the channel is idle at CCA}^1 \text{ and CCA}^2\}$$
$$= \frac{\{1-\pi_{\text{Tx}} - \sum_{i=0}^{M}(\pi_{i,0}+\pi_{i,-1})\}^{n-1}}{(1-\pi_{\text{Tx}} - \sum_{i=0}^{M}\pi_{i,-1})^{n-1}}$$

$$\alpha = 1-(1-\pi_{\text{Tx}})^{n-1}$$

$$\beta = P\{\text{the channel is busy at CCA}^2 \mid \text{the channel is idle at CCA}^1\}$$
$$= \frac{P\{\text{the channel is idle at CCA}^1, \text{the channel is busy at CCA}^2\}}{P\{\text{the channel is idle at CCA}^1\}}$$
$$= \frac{(1-\pi_{\text{Tx}})^{n-1} - (1-\pi_{\text{Tx}} - \sum_{i=0}^{M}\pi_{i,-1})^{n-1}}{1-\alpha}$$

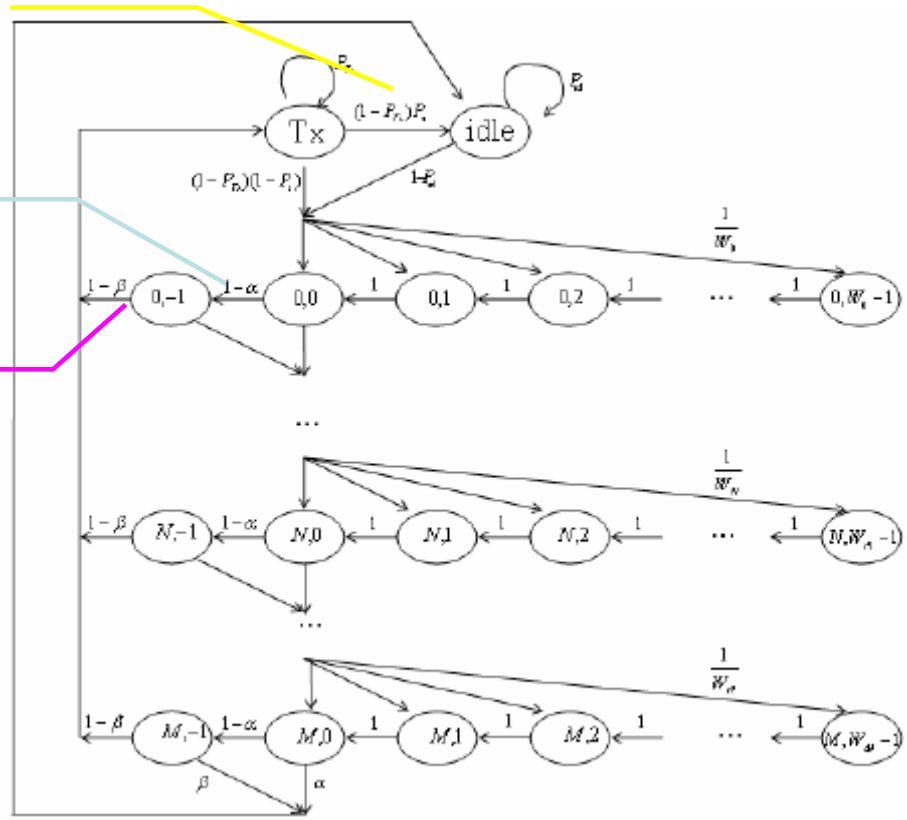

α : Probability of the channel being busy at the first CCA

β : Probability of the channel being busy at the second CCA

P_s : Probability of successful transmission

* $W_j = 2^j W_0$ for $j \le N$ and $W_j = W_N$ for $j > N$, where $W_0 = 2^{\bar{B}E_{min}}$

Mathematical model

The steady-state probabilities for the Markov chain

$$\begin{cases} \pi_{i,0} = (\alpha+\beta-\alpha\beta)^i \pi_{0,0} \quad \text{if } 1 \le i \le M \\ \pi_{i,-1} = (1-\alpha)\pi_{i,0} \quad \text{if } 0 \le i \le M \\ \pi_{0,j} = \pi_{0,0} - \{(1-P_{\text{Tx}})(1-P_s)\pi_{\text{Tx}} + (1-P_{\text{idle}}\pi_{\text{idle}})\} \quad \text{if } 1 \le j \le W_0 - 1 \\ \pi_{i,j} = \pi_{i,0} - \frac{j}{W_i}(\alpha\pi_{i-1,0} + \beta\pi_{i-1,-1}) \quad \text{if } 1 \le i \le M,\ 1 \le j \le W_i - 1 \\ \pi_{\text{Tx}} = \frac{1-\beta}{1-P_{\text{Tx}}} \sum_{i=0}^{M} \pi_{i,-1} \\ \pi_{\text{idle}} = \frac{1}{1-P_{\text{idle}}}\{\alpha\pi_{M,0} + \beta\pi_{M,-1} + (1-P_{\text{Tx}})P_s\pi_{\text{Tx}}\} \end{cases}$$

⇨ All steady-state probabilities for this Markov chain can be represented in terms of $\pi_{0,0}$. $\pi_{0,0}$ is finally determined by the normalization condition.

Performance Measures

- The normalized system throughput S

  : defined as the fraction of time the channel is used to successfully transmit

$$S = n \cdot \pi_{Tx} \cdot P_s$$

- The average delay D for a packet

  : the duration from the time point of arrival to device until service completion point

$$D = \sum_{v=0}^{M}\sum_{r=0}^{v} {}_v\mathrm{C}_r \alpha^r \{(1-\alpha)\beta\}^{v-r}(1-\alpha)(1-\beta)P_s\left(\sum_{i=0}^{v}\frac{W_i-1}{2}+2v-r+\frac{1}{1-P_{\mathrm{Tx}}}\right)$$
$$+\sum_{v=0}^{M}\sum_{r=0}^{v} {}_v\mathrm{C}_r \alpha^r \{(1-\alpha)\beta\}^{v-r}(1-\alpha)(1-\beta)(1-P_s)\times\left(\sum_{i=0}^{v}\frac{W_i-1}{2}+2v-r+\frac{1}{1-P_{\mathrm{Tx}}}+D\right)$$
$$+\sum_{r=0}^{M} {}_M\mathrm{C}_r \alpha^r \{(1-\alpha)\beta\}^{M-r}\left\{\alpha\left(\sum_{i=0}^{M}\frac{W_i-1}{2}+2M-r-2\right)+(1-\alpha)\beta\left(\sum_{i=0}^{M}\frac{W_i-1}{2}+2M-r-1\right)\right\}$$

Packet delay in the case of the transmission at the 'v'th transmission

Packet delay for the cases of Collision at the 'v'th backoff stage
Note that after collision the process starts from the '0'th backoff stage again

Packet delay in the case of discard due to collision after the 'M'th backoff stage

Performance Measures

- The packet loss probability P_{loss}

the case that the packet in a backoff Procedure suffers loss after collision at the 'v'th backoff stage

$$P_{\text{loss}} = \sum_{v=0}^{M}\sum_{r=0}^{v} {}_{v}\mathrm{C}_{r}\alpha^{r}\{(1-\alpha)\beta\}^{v-r}(1-\alpha)(1-\beta)(1-P_{s})P_{\text{loss}}$$

$$+\sum_{r=0}^{M} {}_{M}\mathrm{C}_{r}\alpha^{r}\{(1-\alpha)\beta\}^{M-r}\{\alpha+(1-\alpha)\beta\}$$

the case that the packet in a backoff procedure suffers loss because channel is busy at the first CCA or the second CCA at the 'M'th backoff stage

- The average energy consumption E^{slot} in per one slot time

  : total energy consumption during one cycle divided by the total number of slots in one cycle

$$E^{\text{slot}} = \{1-\sum_{i=0}^{M}(\pi_{i,0}+\pi_{i,-1})-\pi_{\text{Tx}}\}E_{\text{idle}}+\sum_{i=0}^{M}(\pi_{i,0}+\pi_{i,-1})E_{\text{CCA}}$$

$$+\pi_{\text{Tx}}\{(\frac{1}{1-P_{\text{Tx}}}-T_{\text{wait}-T_{\text{ACK}}})E_{\text{Tx}}+(T_{\text{wait}}+T_{\text{ACK}})E_{\text{Rx}}\}(1-P_{\text{Tx}})$$

E_{Tx}, E_{Rx}, E_{CCA} and E_{idle} : the energy consumption for transmission slot, receiving slot, CCA slot and idle slot

Numerical Results

- Parameters for non-saturated networks when P_{idle} is near 1
  - In fact, packet arrivals are quite rare in many applications of the sensor network such as body area networks
  - Thus, it is quite reasonable to consider light traffic sensor network
  - P_{T_x} = 0.9, N=2, M=4 and W_0=8

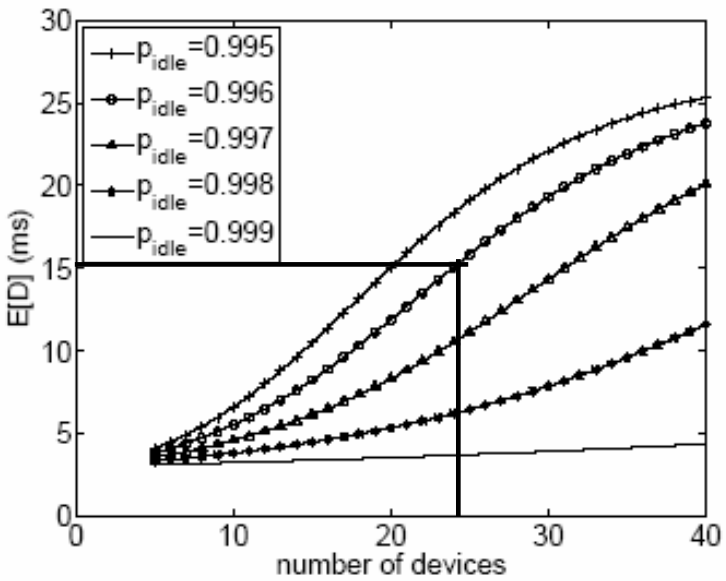

(a) E(D) vs. number of devices

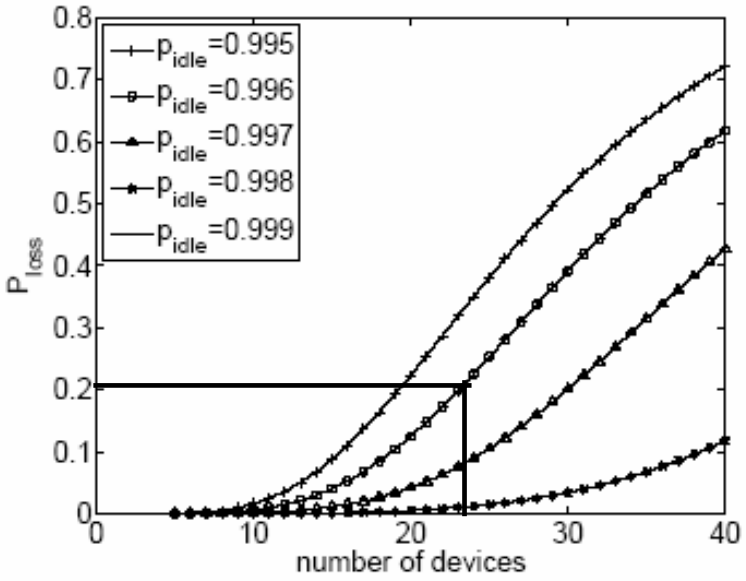

(b) P_{loss} vs. number of devices

Numerical Results

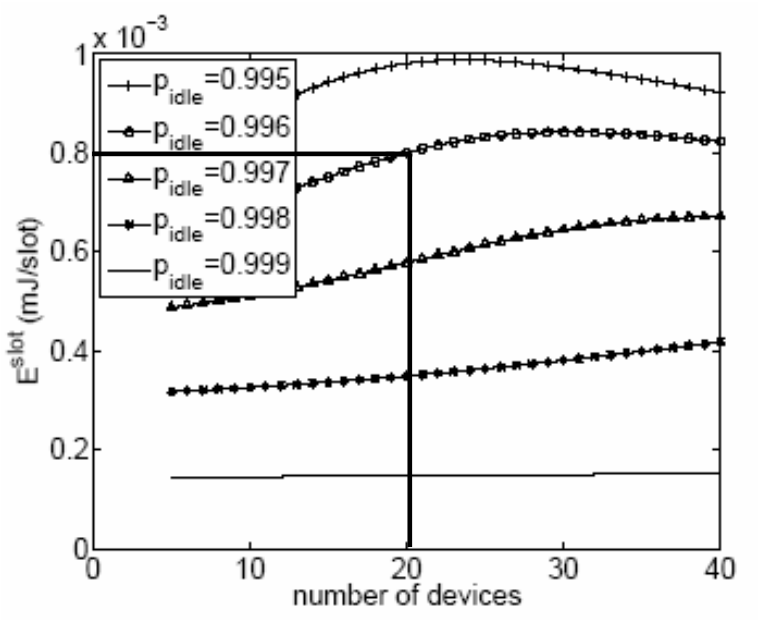

(c) E^{slot} vs. number of devices

- Our results are used to find optimal number of devices with some constraints on performance measures

  <u>example</u> : In a BAN (body area network),

  P_{idle} = 0.996,

  QoS constraint :

  $P_{\text{loss}} \leq 20\%$ and $\text{delay} \leq 15ms$

  energy constraint : 0.8×10^{-3}

  ⇒ optimal # of devices : 20

Cluster Tree Network (Concept)

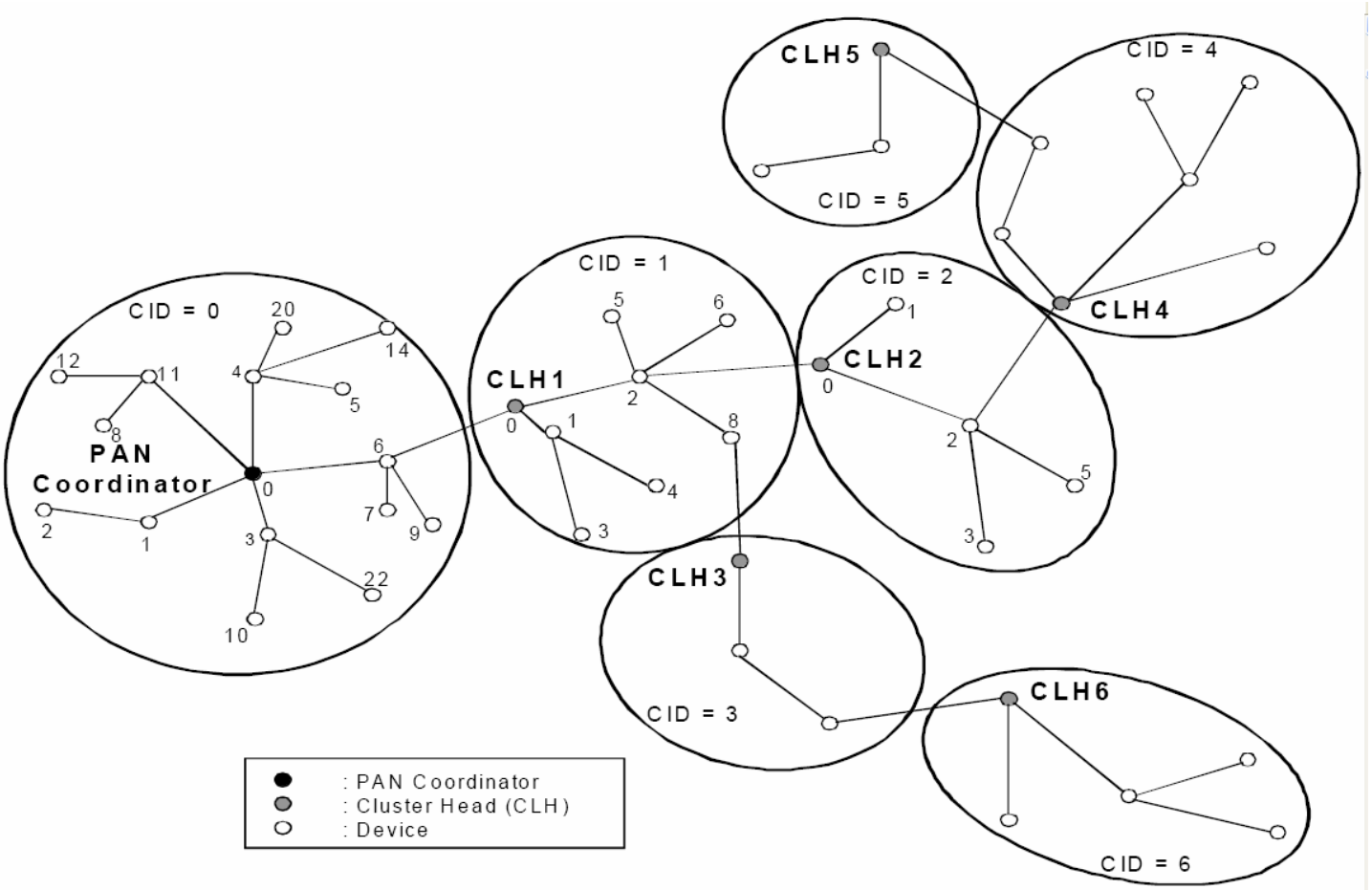

Cluster Tree Structure

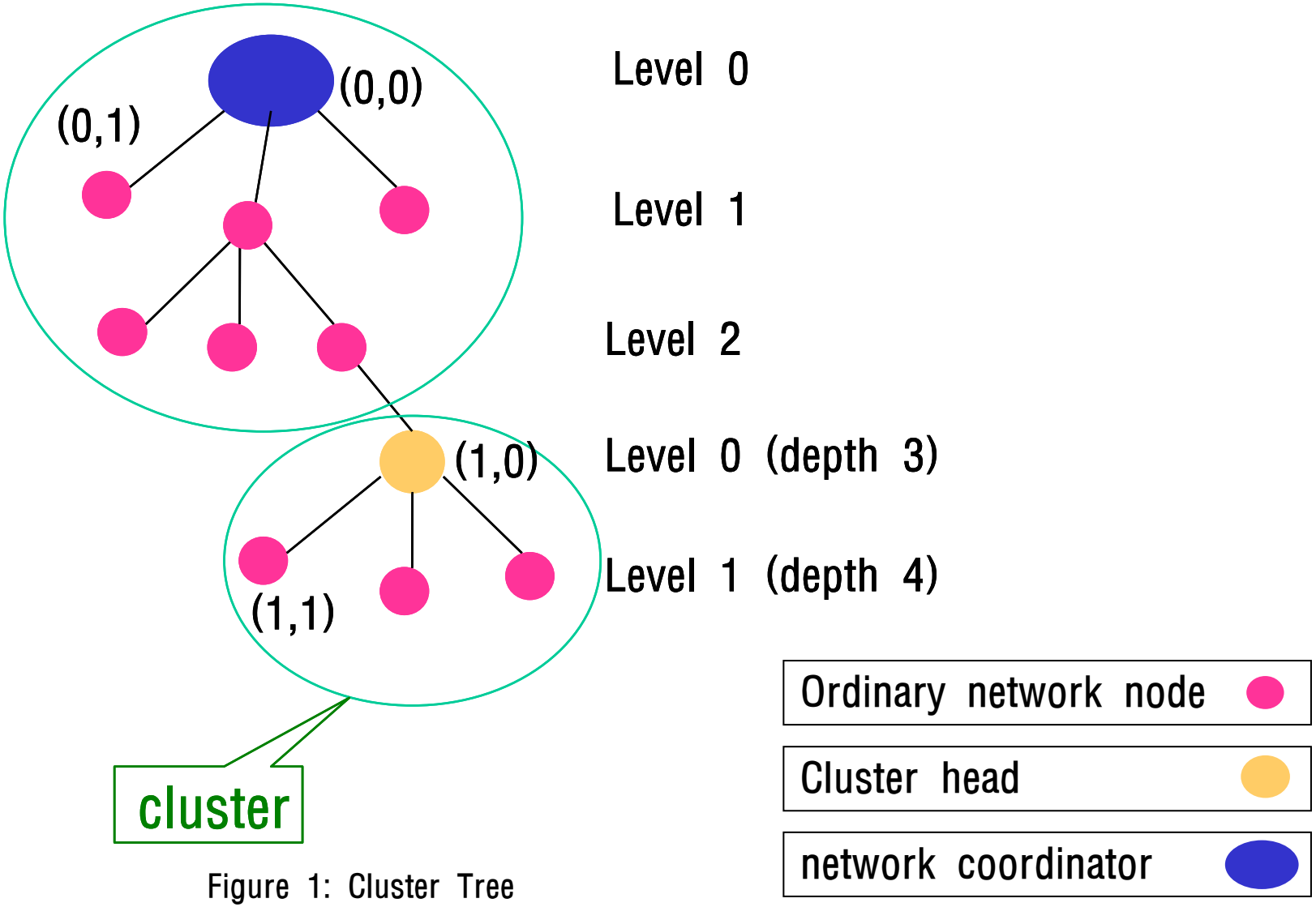

Figure 1: Cluster Tree

Main Parameters

Cluster Tree

Cm	Maximum number of children of a node
Lm	Maximum depth level in a cluster
Li	Level of node I
B_{size}	하나의 네트워크내의 모든 단말기를 수용하기 위한 전체 address space (Block size) $$B_{size} = \frac{1 - C_m^{L_m+1}}{1 - C_m}$$
C_{skipi}	Address space between node's children $$C_{skip} = Floor\left[\frac{B_{size} - \sum_{k=0}^{L_i} C_m^k}{C_m^{L_i+1}}\right]$$

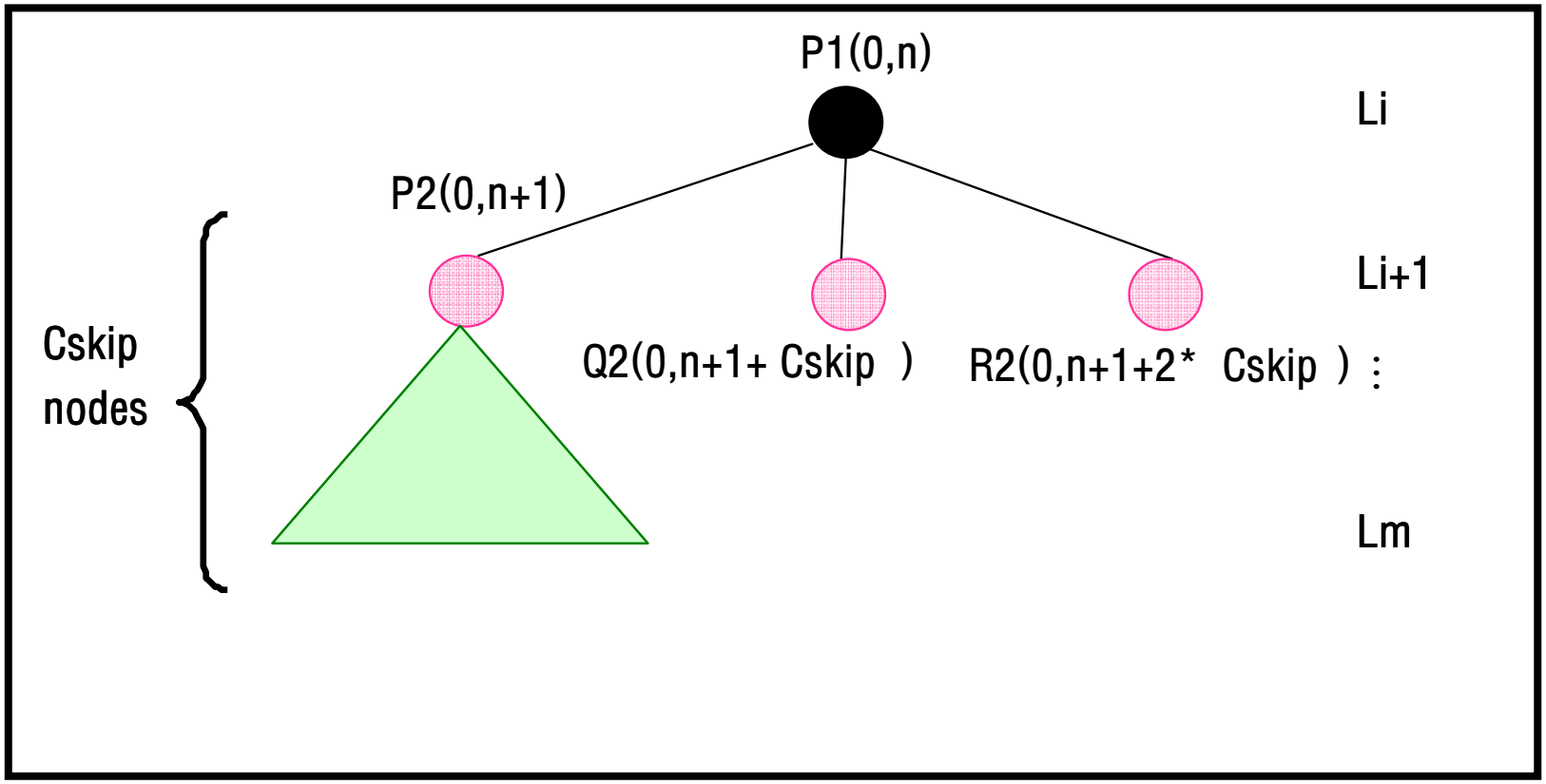
P1(0,n)
Li
P2(0,n+1)
Li+1
Cskip
nodes
Q2(0,n+1+ Cskip)
R2(0,n+1+2* Cskip)
:
Lm

주소 지정 방식 Cluster Tree

- First child address : n + 1
- Second child address : n + 1 + Cskip
- K-th child address : n + 1 + (k-1)*$Cskip_i$

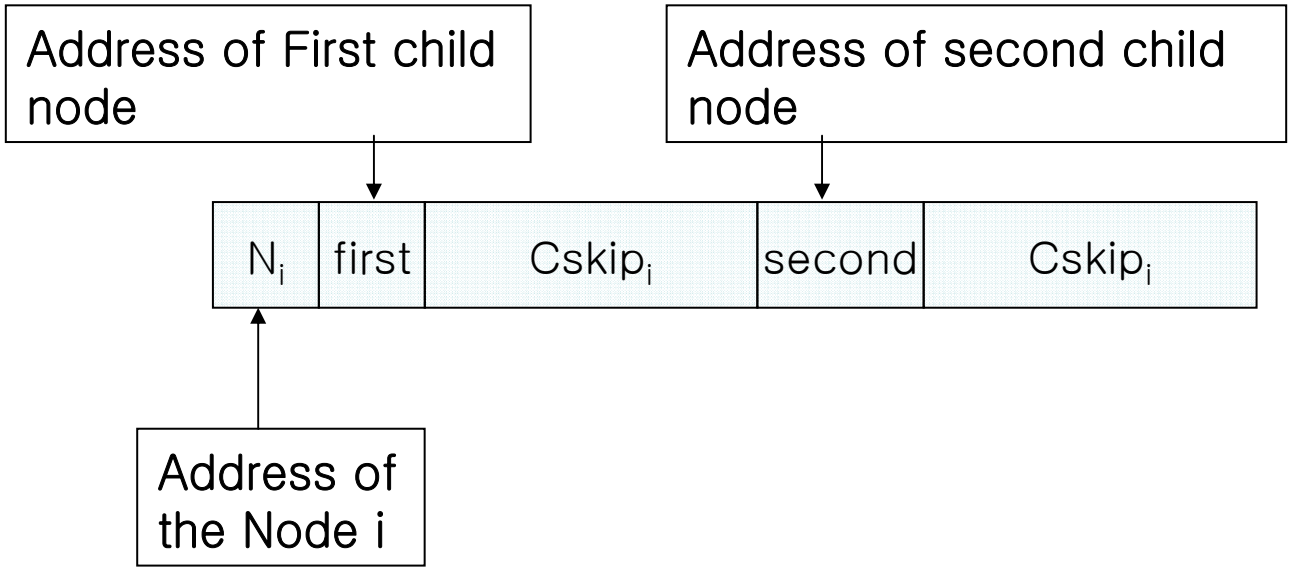

주소 지정 방식 Cluster Tree

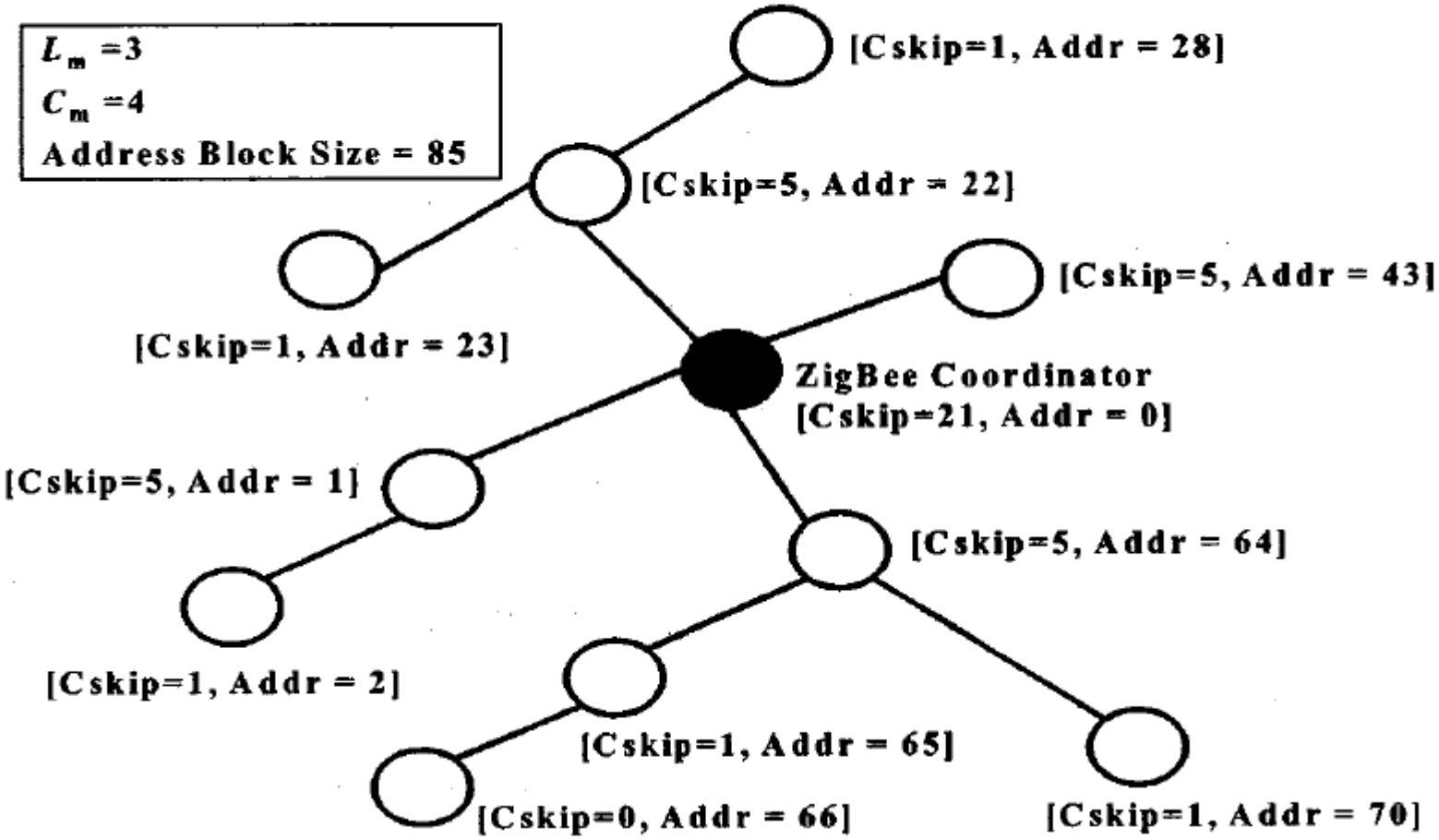

❑ Cluster head selection process

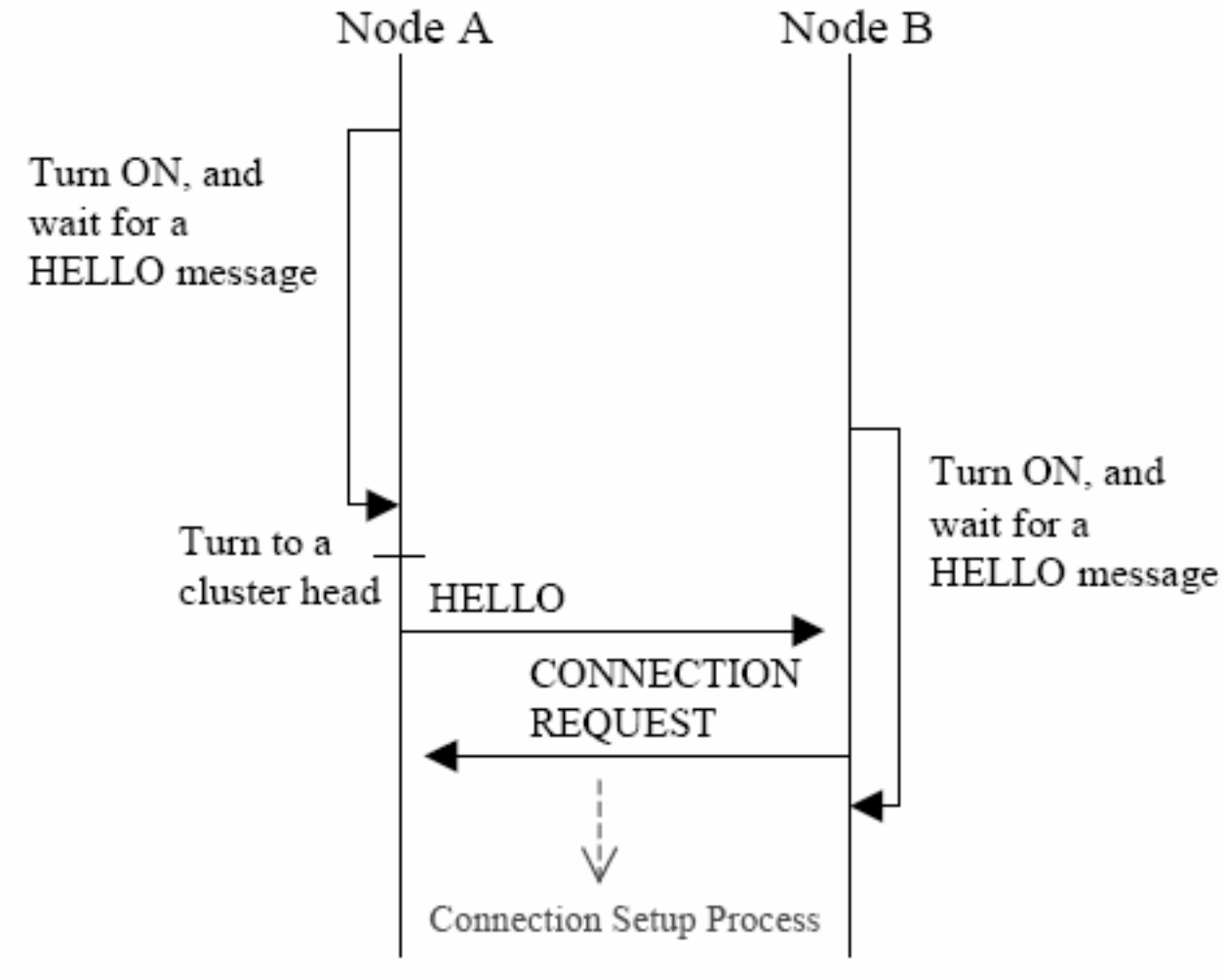

❑Single hop cluster에서의 node 연결

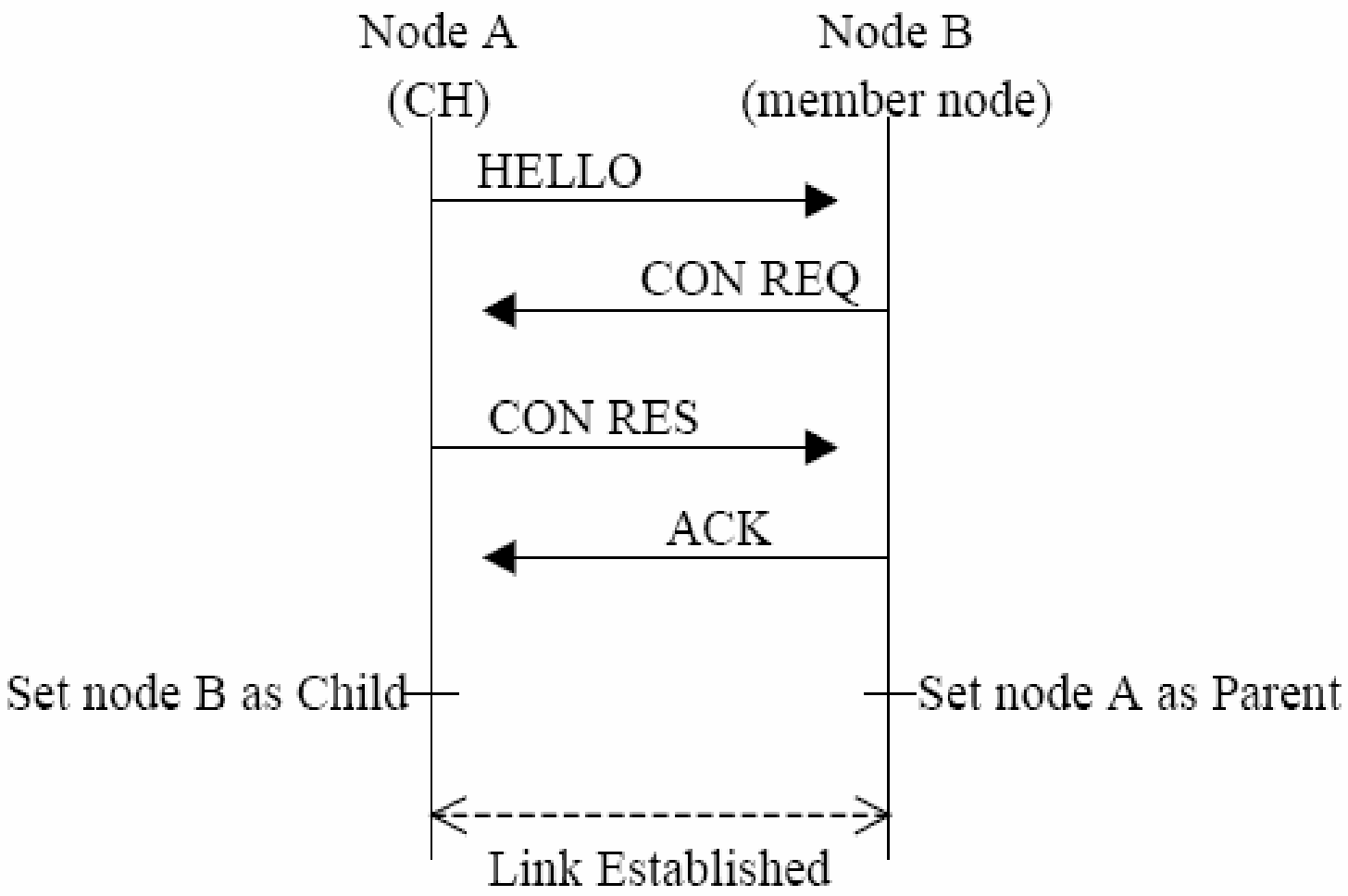

❑ Multi hop cluster에서의 node 연결

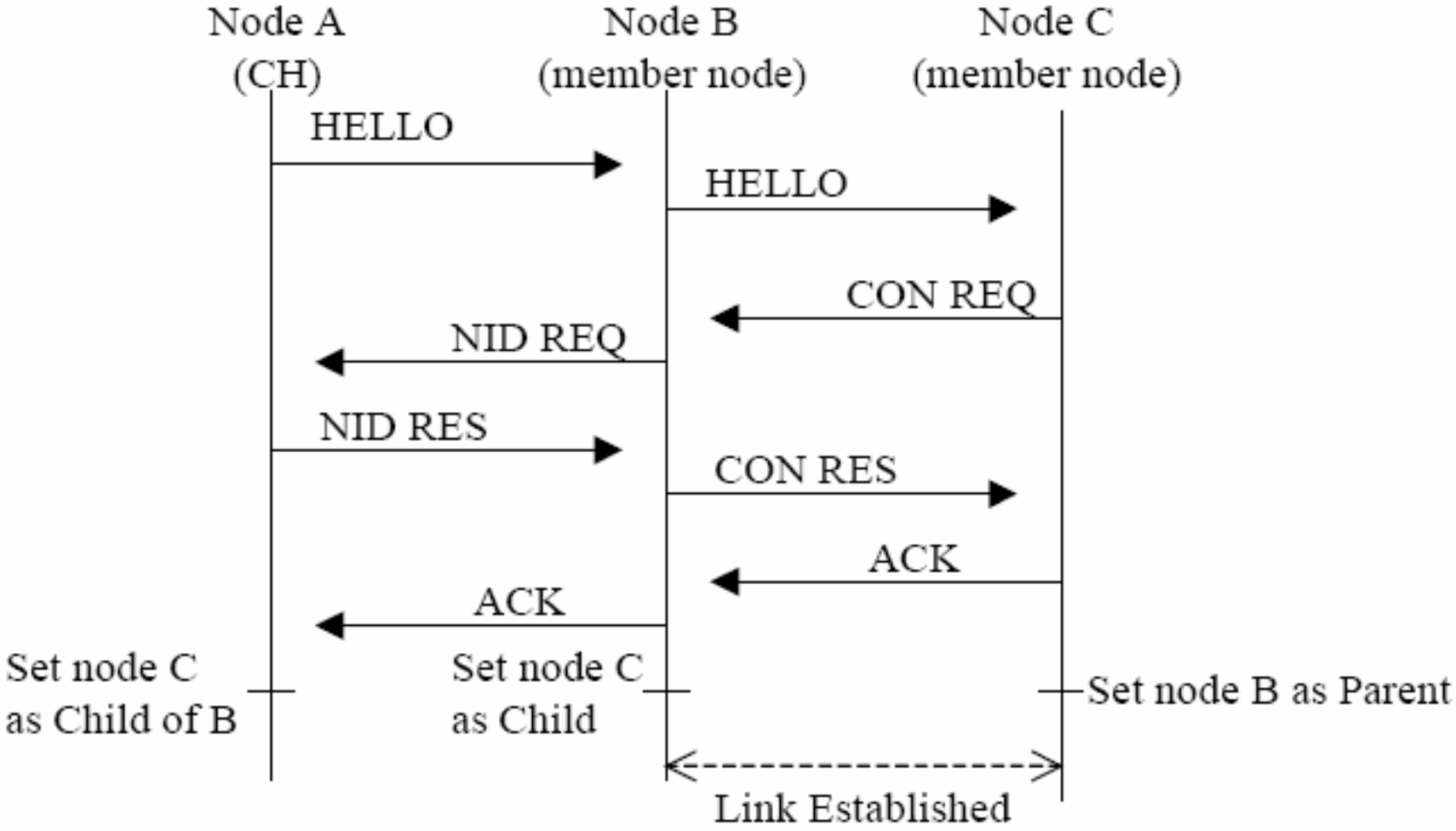

❑ Multi hop cluster structure

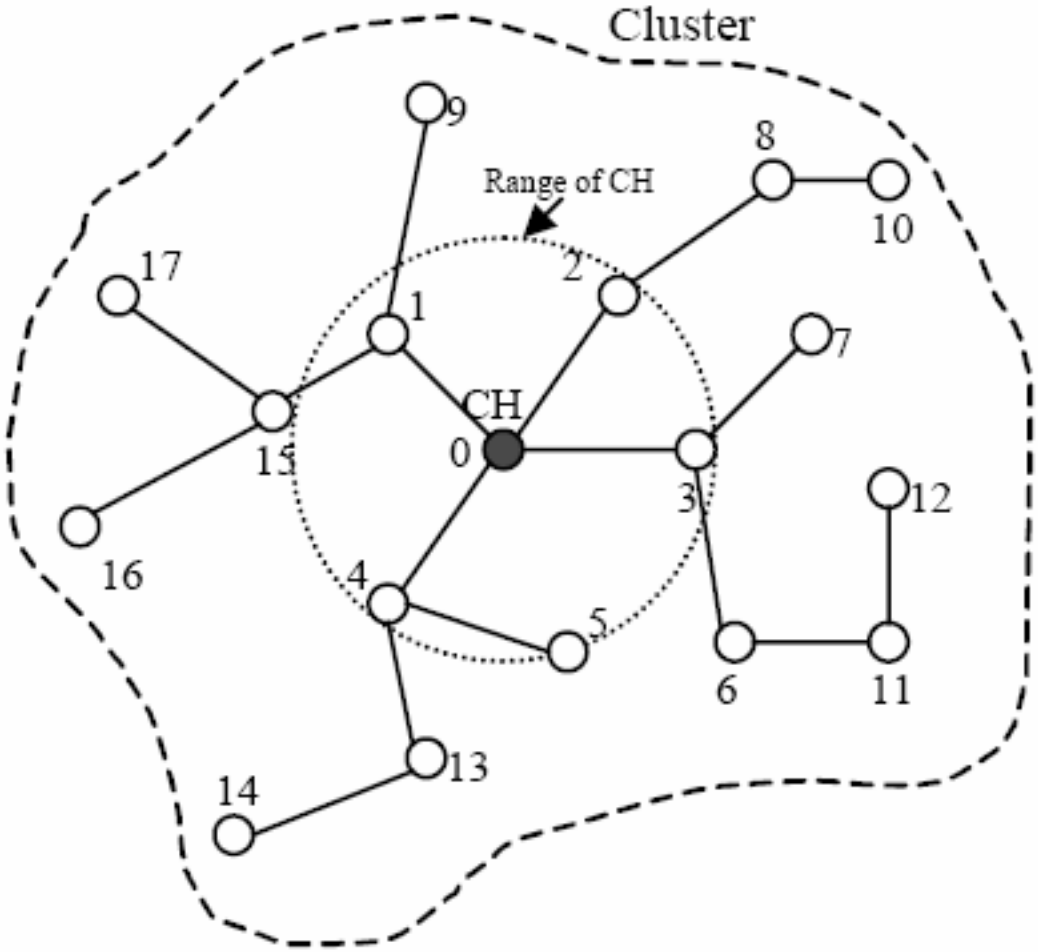

- Updating neighbor list by Hello message

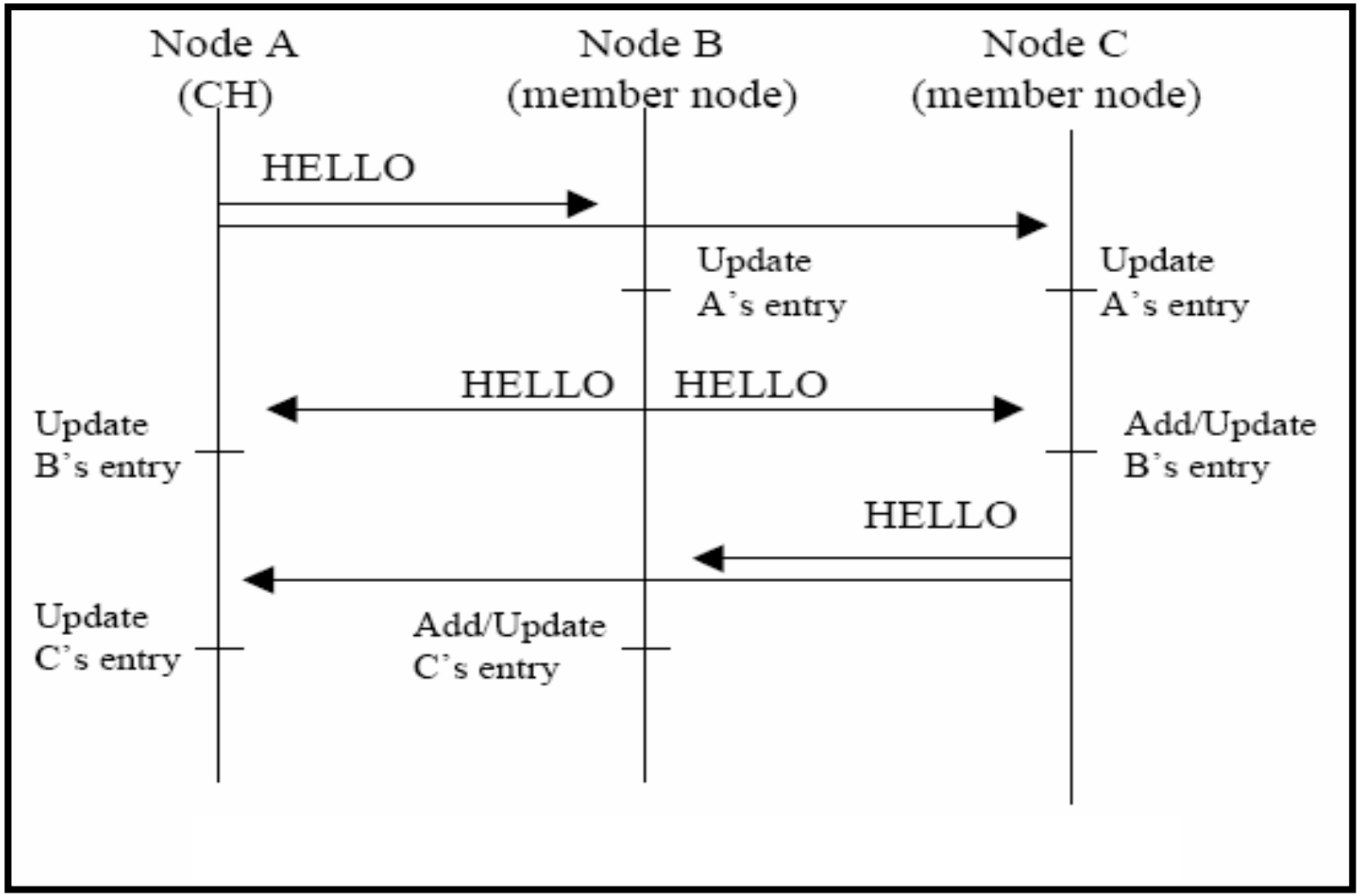

❑ Neighbor list

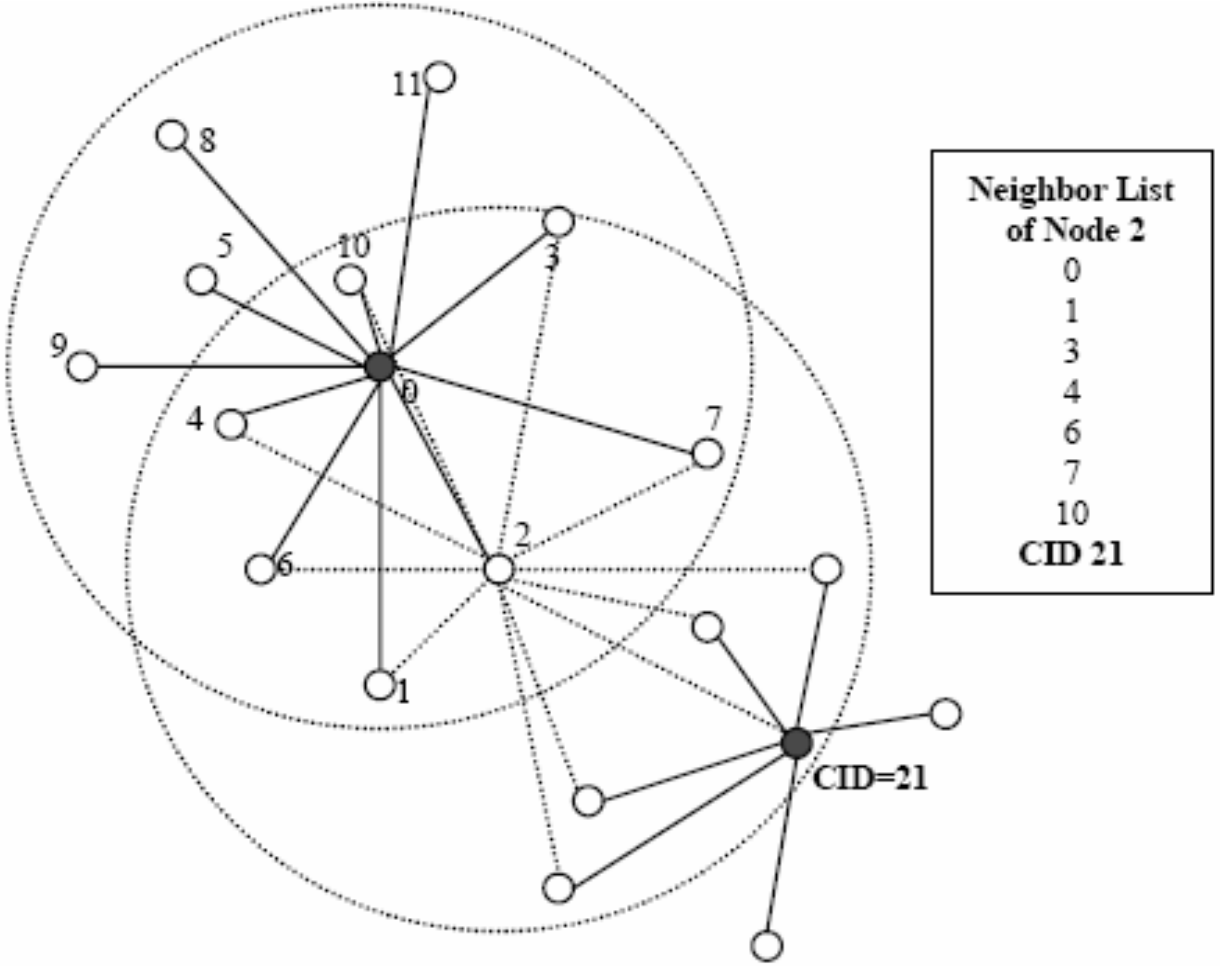

❑ Link-state report

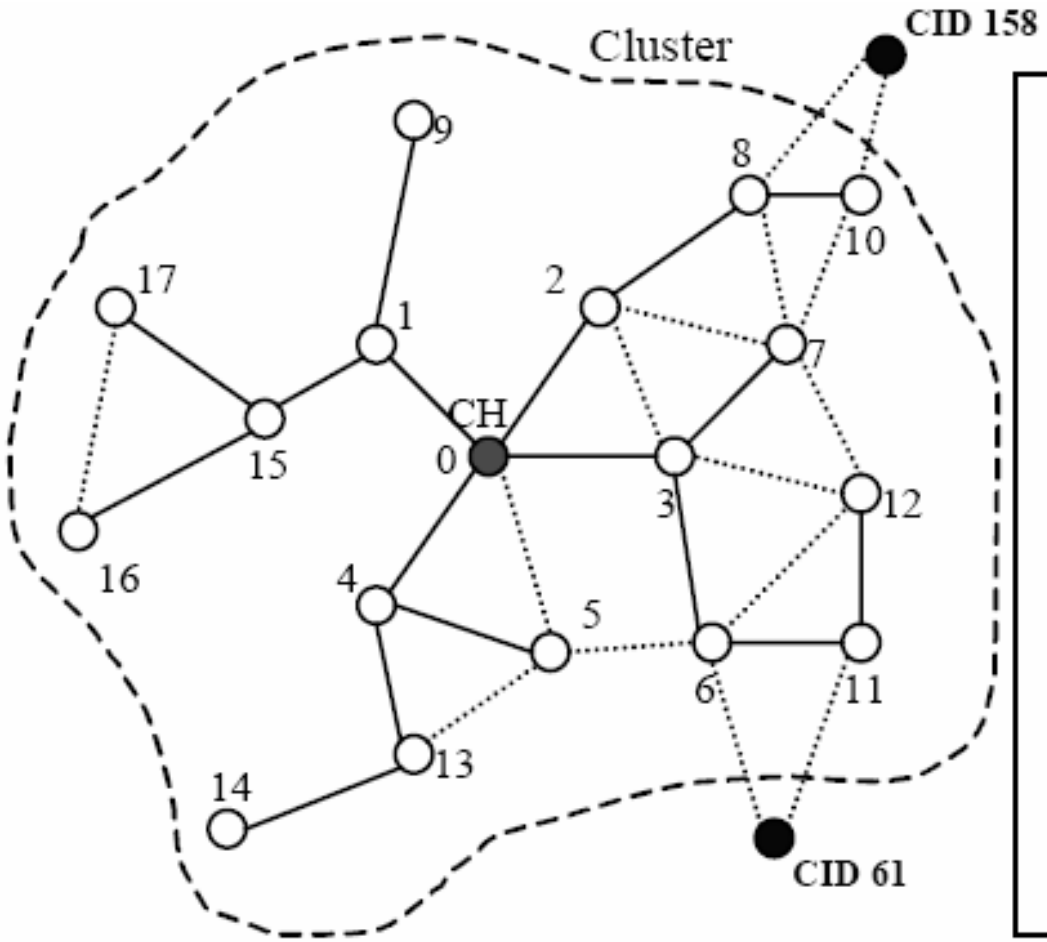

Sender	LINK-STATE REPORT
Node 1	0, 9, 15
Node 2	0, 3, 7, 8
Node 3	0, 2, 6, 7, 12
Node 4	0, 5, 13
Node 5	0, 4, 6, 13
Node 6	3, 5, 11, 12, *CID61*
Node 7	2, 3, 8, 10, 12
Node 8	2, 7, 10 , *CID158*
Node 9	1
Node 10	7, 8 , *CID158*
Node 11	6, 12 , *CID61*
Node 12	3, 6, 7, 11
Node 13	4, 5, 14
Node 14	13
Node 15	1, 16, 17
Node 16	15, 17
Node 17	15, 16

- Topology update
  - Shortest path between cluster head and member nodes.
  - Inform it to the members by topology update message
  - Route selection
    - » Choose the route with the smallest hop count.
    - » Choose the smallest node ID

❑Topology update

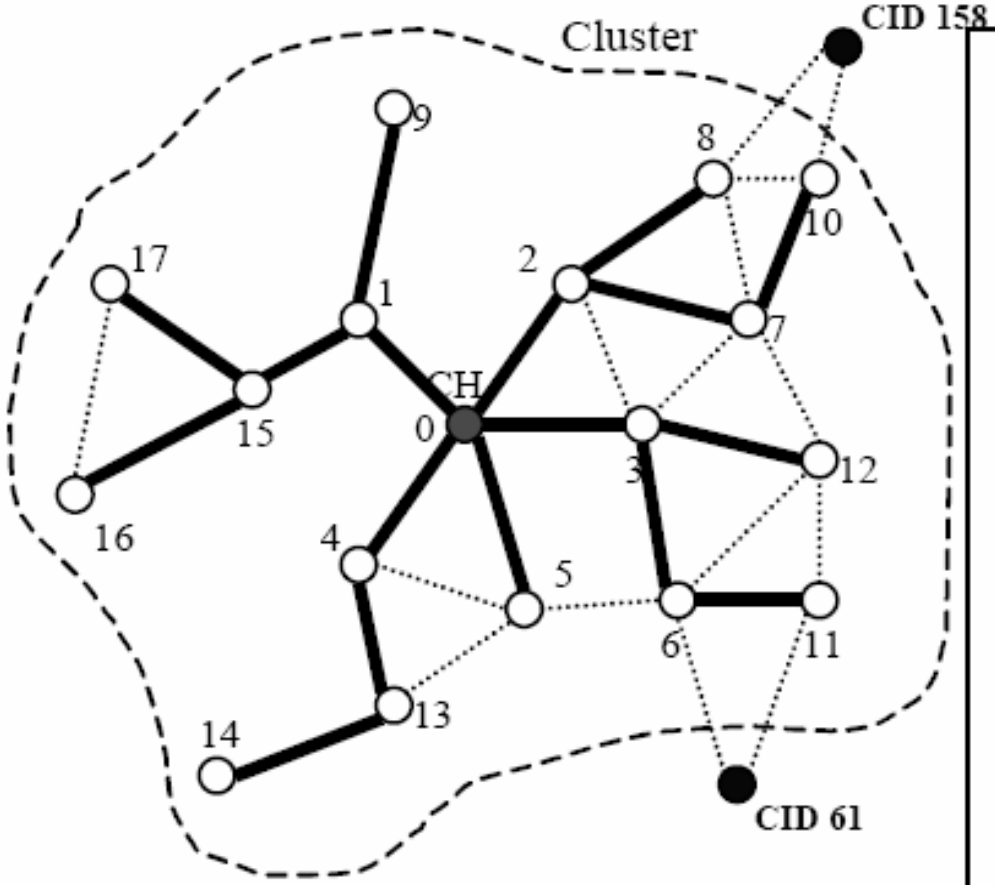

TOPOLOGY UPDATE

Node	Parent Node
Node 1	0
Node 2	0
Node 3	0
Node 4	0
Node 5	0
Node 6	3
Node 7	2
Node 8	2
Node 9	1
Node 10	7
Node 11	6
Node 12	3
Node 13	4
Node 14	13
Node 15	1
Node 16	15
Node 17	15
CID 61	6
CID 158	8

- Network redundancy
  - Member node has trouble.
  - Unable to communicate.
  - Route of the cluster would be reconfigured.

❑ Network redundancy

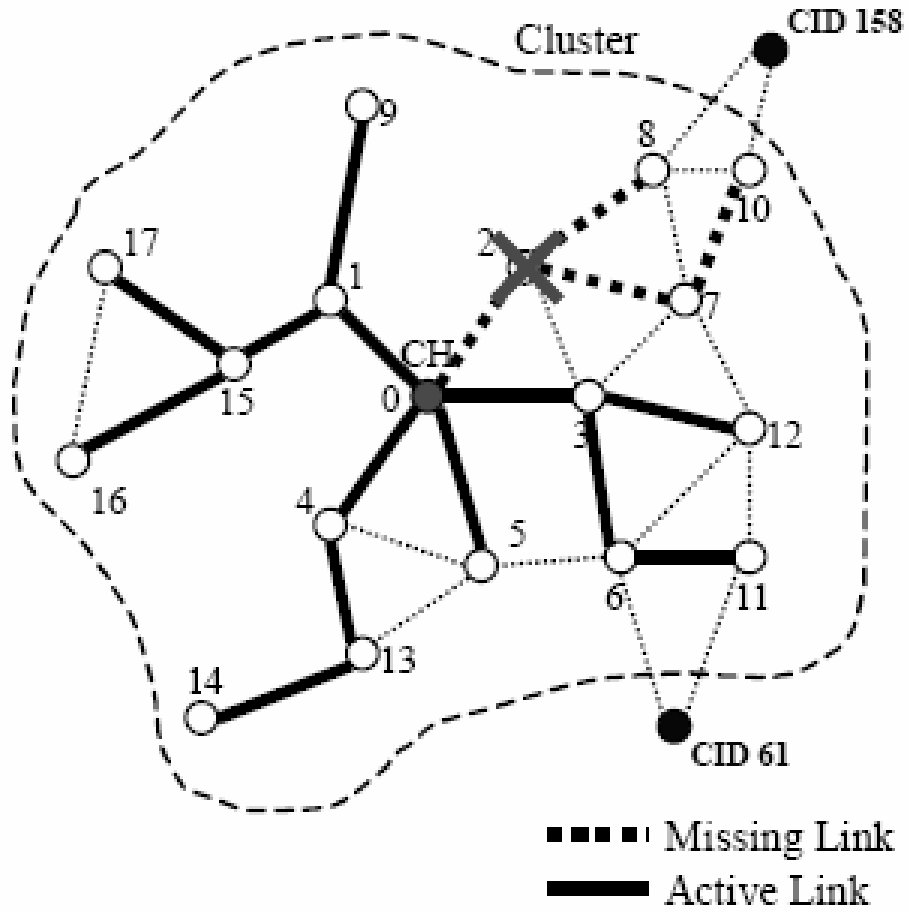

Sender	LINK-STATE REPORT
Node 1	0, 9, 15
~~Node 2~~	~~0, 3, 7, 8~~
Node 3	0, ~~2~~, 6, 7, 12
Node 4	0, 5, 13
Node 5	0, 4, 6, 13
Node 6	3, 5, 11, 12 , *CID61*
~~Node 7~~	~~2, 3, 8, 10, 12~~
~~Node 8~~	~~2, 7, 10 , *CID158*~~
Node 9	1
~~Node 10~~	~~7, 8 , *CID158*~~
Node 11	6, 12 , *CID61*
Node 12	3, 6, 7, 11
Node 13	4, 5, 14
Node 14	13
Node 15	1, 16, 17
Node 16	15, 17
Node 17	15, 16

❑ Network redundancy

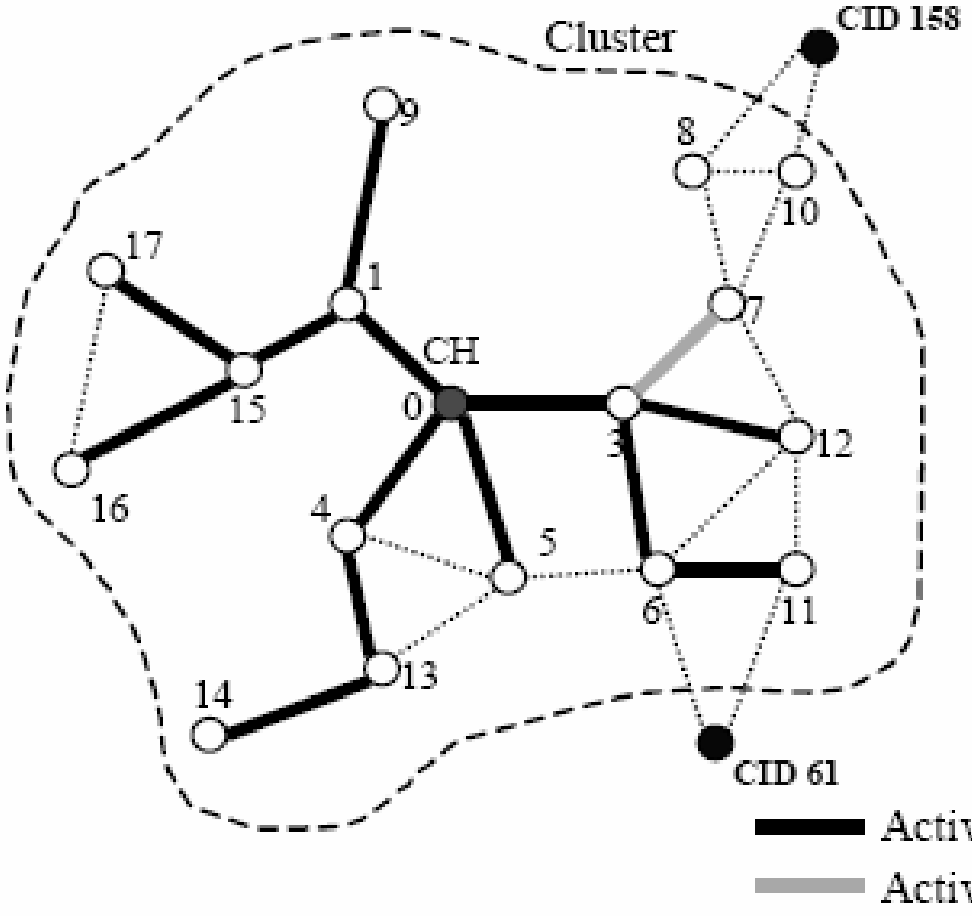

TOPOLOGY UPDATE

Node	Parent Node
Node 1	0
Node 3	0
Node 4	0
Node 5	0
Node 6	3
Node 7	3
Node 9	1
Node 11	6
Node 12	3
Node 13	4
Node 14	13
Node 15	1
Node 16	15
Node 17	15
CID 61	6

❑ Network redundancy

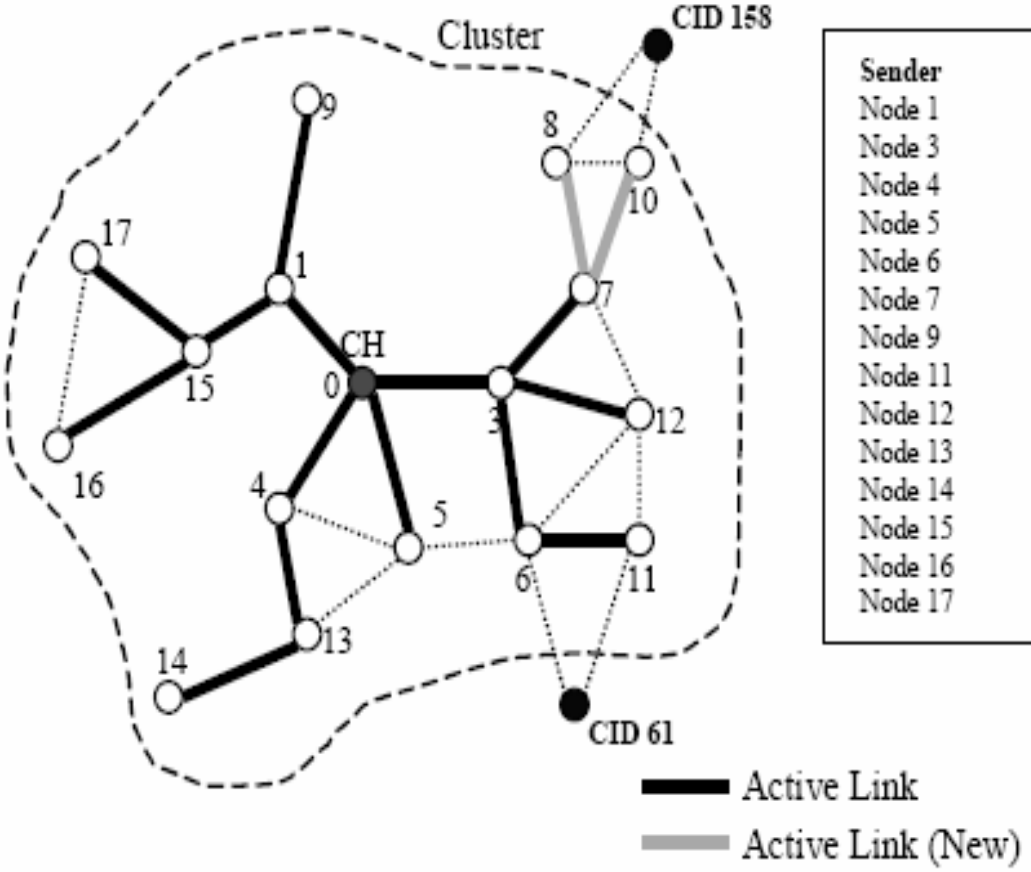

Sender	LINK-STATE REPORT
Node 1	0, 9, 15
Node 3	0, 6, 7, 12
Node 4	0, 5, 13
Node 5	0, 4, 6, 13
Node 6	3, 5, 11, 12 , *CID61*
Node 7	3, 8, 10, 12
Node 9	1
Node 11	6, 12 , *CID61*
Node 12	3, 6, 7, 11
Node 13	4, 5, 14
Node 14	13
Node 15	1, 16, 17
Node 16	15, 17
Node 17	15, 16

TOPOLOGY UPDATE

Node	Parent Node
Node 1	0
Node 3	0
Node 4	0
Node 5	0
Node 6	3
Node 7	3
Node 8	7
Node 9	1
Node 10	7
Node 11	6
Node 12	3
Node 13	4
Node 14	13
Node 15	1
Node 16	15
Node 17	15
CID 61	6

❑P1에서 P6으로 전송

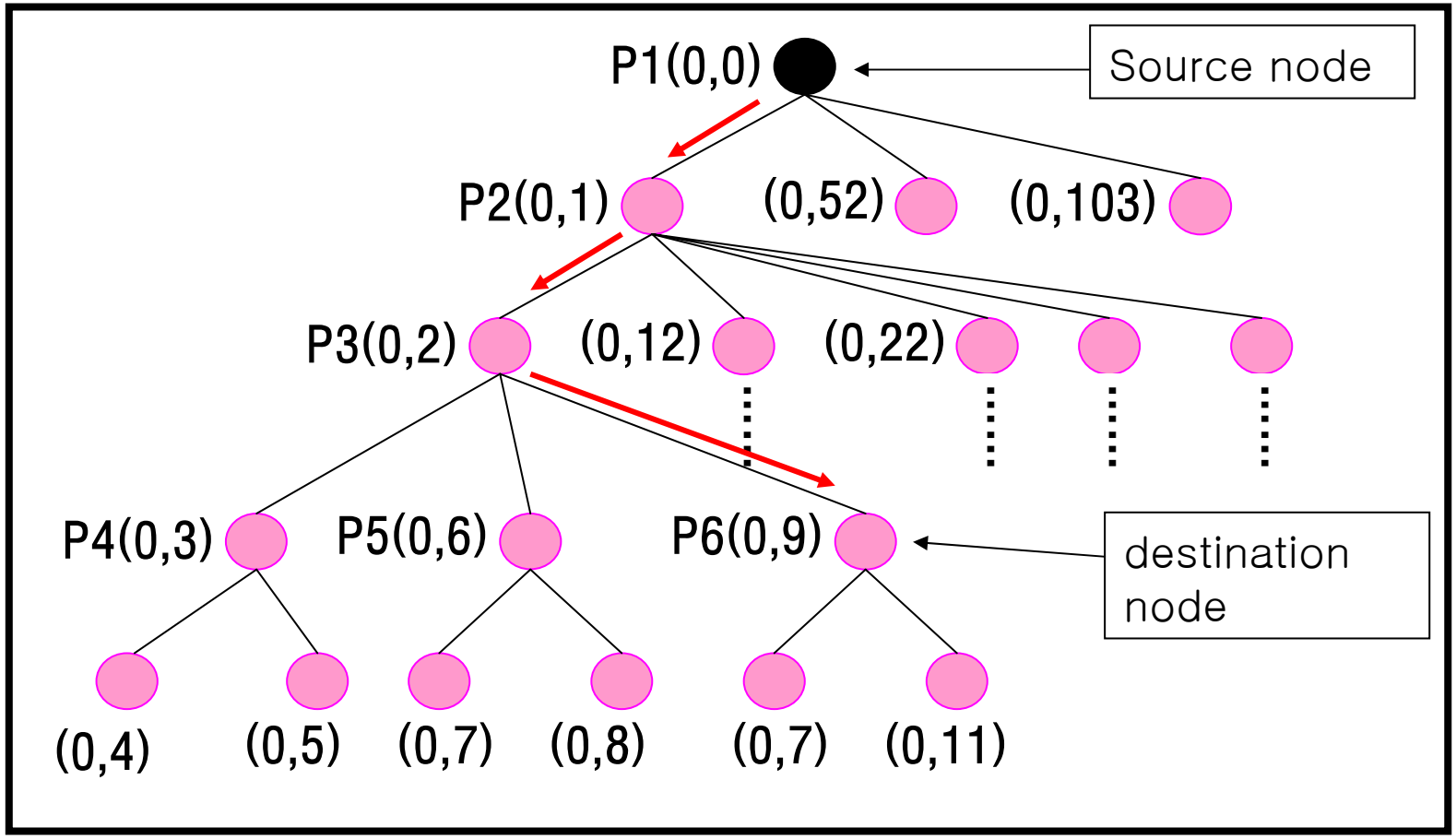
P1(0,0)
Source node
P2(0,1)
(0,52)
(0,103)
P3(0,2)
(0,12)
(0,22)
P4(0,3)
P5(0,6)
P6(0,9)
destination node
(0,4)
(0,5)
(0,7)
(0,8)
(0,7)
(0,11)

Advantages and Disadvantages Cluster Tree

- 장점
  - 주소체계의 간편화로 인한 통신 비용 감소
- 단점
  - 중간 지점의 노드 분실시 기존 주소체계 사용 불가
  - 메시지의 전달경로는 상위 노드 또는 하위 노드이기 때문에 Optimal path를 통한 메시지 전달 문제

References

- 정성훈, 전호인, “IEEE 802.15.4 and ZigBee Protocol:유비쿼터스 센서 네트워킹을 위한 Active RFID기술,”
- Ed Callaway, “Cluster Tree Networks,” IEEE P802.15 Working Group for Wireless Personal Area Networks (WPANs) document, 30 April, 2001
- IEEE 802.15.4: Wireless Medium Access Control (MAC) and Physical Layer (PHY) Specifications for Low-Rate Wireless Personal Area Networks (LR-WPANs), May 2003
- “Emerging Standards: where does ZigBee fit?”, Bob Heile, Oct, 2004
- BongDae Choi, “Performance analysis of IEEE 802.15.4 in Non-beacon mode under non-saturated condition,” 2nd Korea-Netherlands Conference on Queuing Theory and its applications to Telecommunication Systems, Oct. 24, 2006

Q & A