System architecture and aspects of SESAME: Small cEllS coordinAtion for Multi-tenancy and Edge services

Ioannis Giannoulakis, Ph.D. (NCSR Demokritos)

giannoul@iit.demokritos.gr

2nd IEEE Conference on Network Softwarization

Seoul, South Korea

June 10th, 2016

Outline

- Key elements & objectives
- SESAME use cases
- High level architecture / Merging Small Cells with NFV world
- RAN Virtualisation as mobile edge application
- Impact, Innovation Potential

5G PPP SESAME targets to…

- Placement of NFV at the network edge (LTE access network) for both RAN virtualization and end user application service through NFV and Edge Cloud Computing.

- Consolidation of multi-tenancy/network sharing in LTE infrastructures (based on MOCN Radio Architecture protocol). This will allow several operators/service providers to engage in new sharing models of both access capacity and edge computing capabilities.

Key goals

- Development and demonstration of innovative architecture, capable of providing Small Cell coverage to multiple operators, “as a Service”.
- Logical partitioning of localized Small Cell network to multiple isolated slices, as well as their provision to several tenants.
- In addition to virtualizing and partitioning Small Cell capacity, SESAME supports enhanced multi-tenant edge cloud services by enriching Small Cells with “micro servers”.
- Apart from benefits offered to existing market players, the SESAME approach allows new stakeholders to dynamically enter the network value chain

Measurable objectives

- Design/implementation of multi-operator CESC prototype, supporting self-X, enabling multi-tenant and multi-service access infrastructure.
- Specification/implementation of low-cost Light DC prototype as NFV PoP providing support for low latency applications and high QoS, while minimizing space, infrastructure costs and energy consumption.
- Efficient resource planning and coherent management of the multi-operator Small Cells as light NFV distributed infrastructure.
- Implementation of an Orchestrator, capable of chaining and orchestrating the different PNFs and VNFs, required to cope with the dynamic SLAs between the CESC provider and the network operators.
- Integration into a Pre-Commercial Prototype of Small Cells, Light DC and management and orchestration functionalities.
- Market Analysis, Road-mapping, establishment of new Business Models - Detailed Techno-economic Analysis towards exploitation and commercialisation.

The SESAME 'Scene'

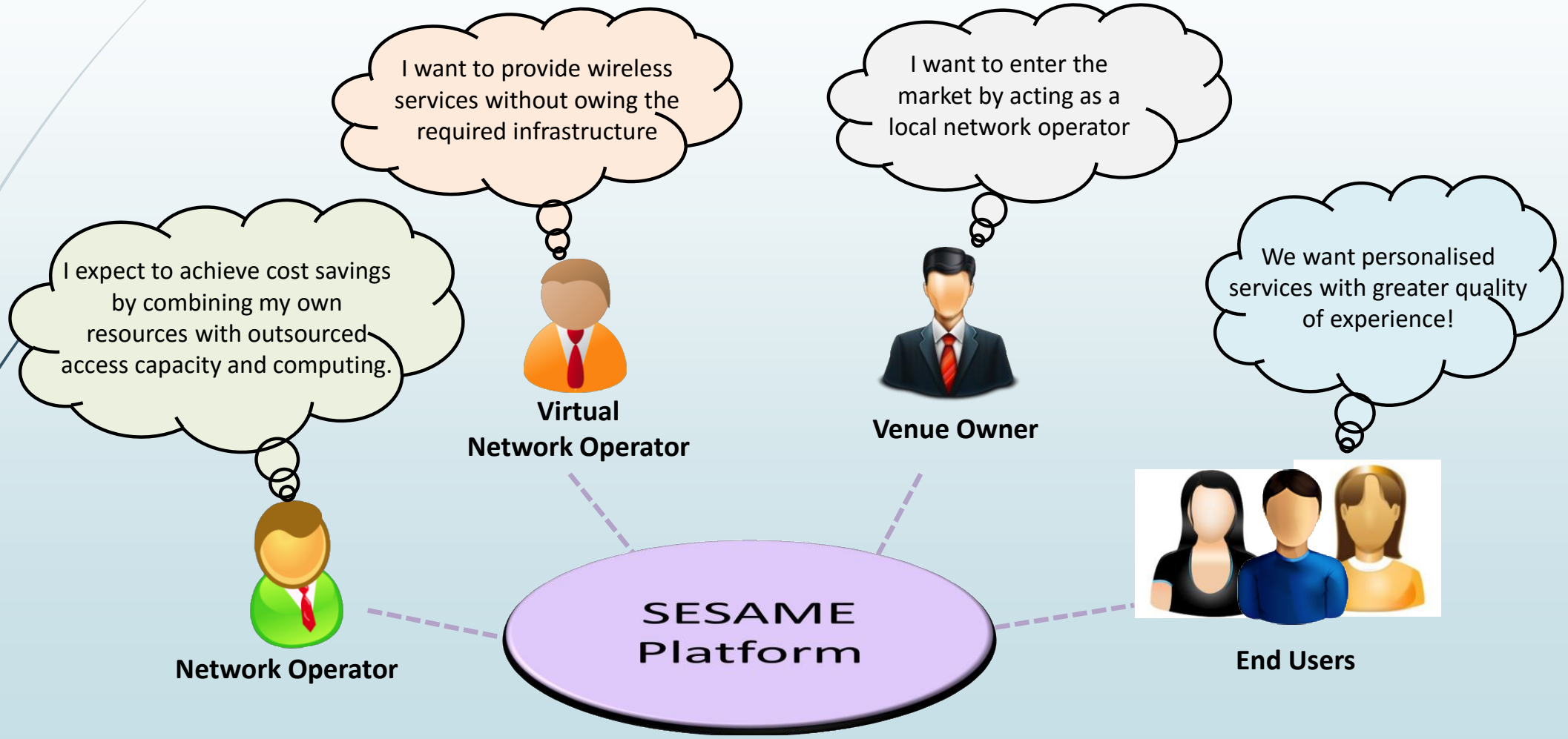

Actors

- IT Equipment Vendor/manufacturer (ITEV)
- Small Cell Network Operator (SCNO)
- Virtual Small Cell Network Operator (VSCNO)
- Mobile Operator (MO)
- Service Provider (SP)
- Over-The-Top Player (OTT)
- Function Provider (FP)
- End-Users (EU)

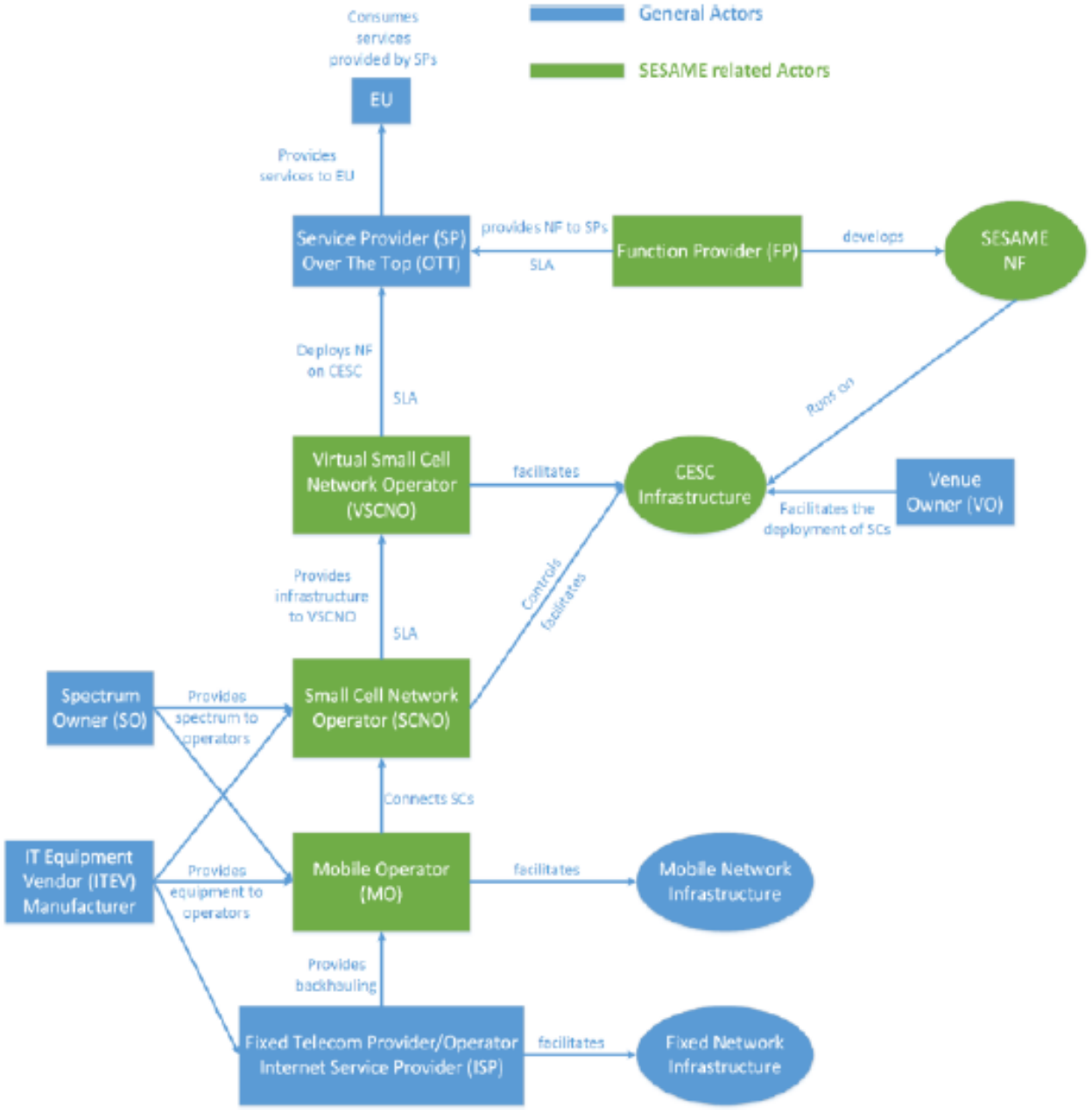

Use Case - 1

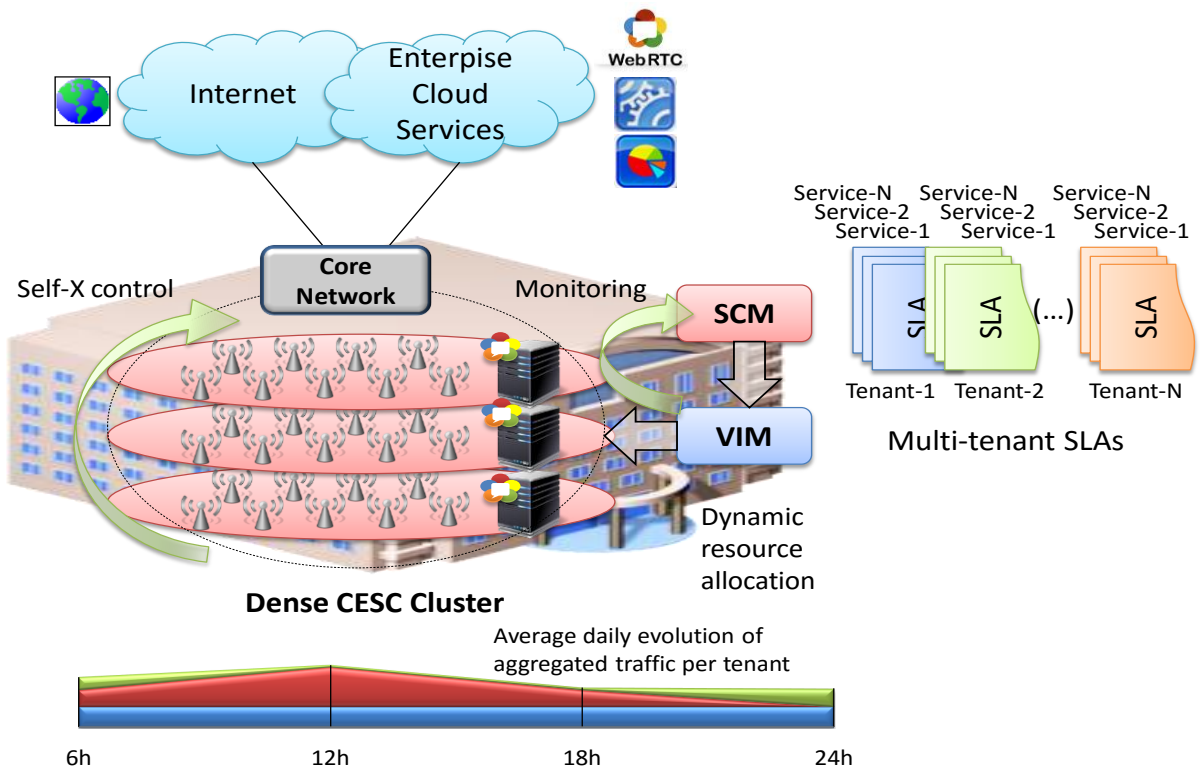

Multi-tenancy features

CESC provider owns unique networking infrastructure and serves multiple virtual network operators in a venue (cluster).

In order to deploy the proper services, the CESC provider establishes a SLA with each one of the VSCNOs.

This scenario serves as a PoC that the CESC operator will support requirements from different tenants over the physical and the virtualized infrastructure.

Use Case - 2

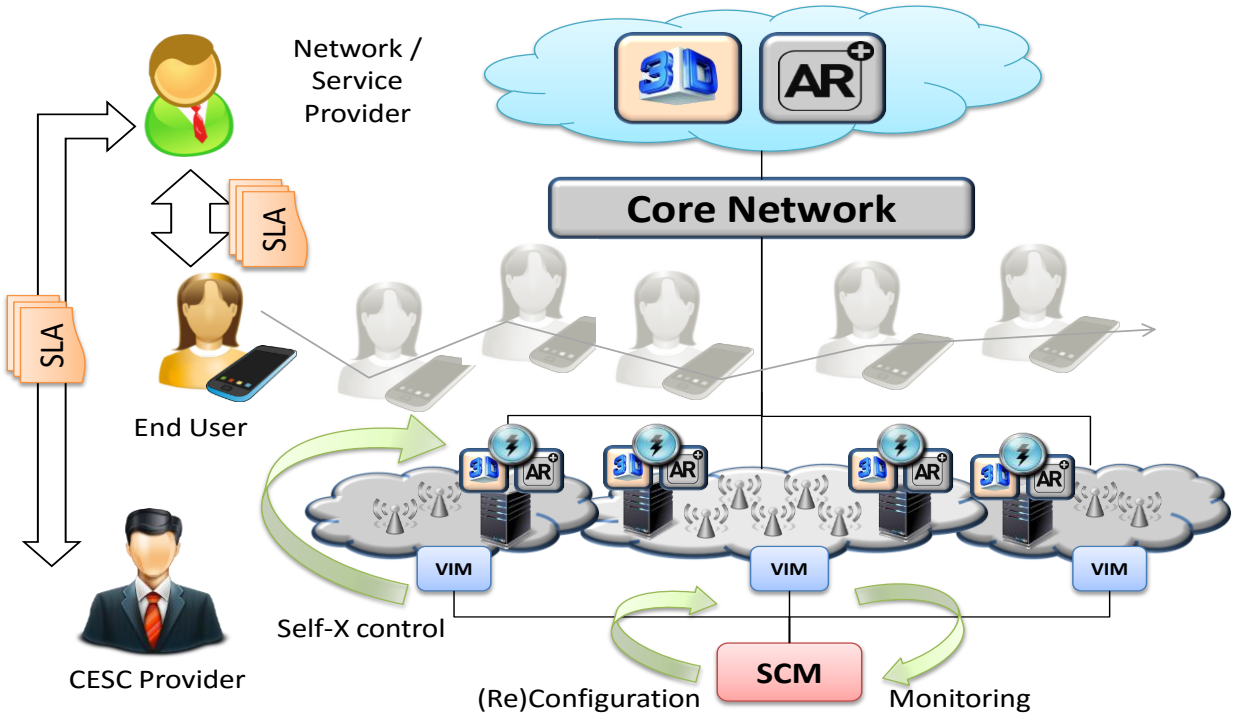

SESAME capabilities concerning enhanced user mobility support

Mobile user roams through contiguous areas and the service continuity and quality must be assured by the CESC provider.

- The concepts and the features demonstrated will include the management and monitoring of SLA fulfillment between the CESC provider and the VSCNO/ service provider
- The CESC provider wil infer mobility events and thus may decide to pre-allocate some of the Light DC resources to accommodate new users' handovers

Use Case - 3

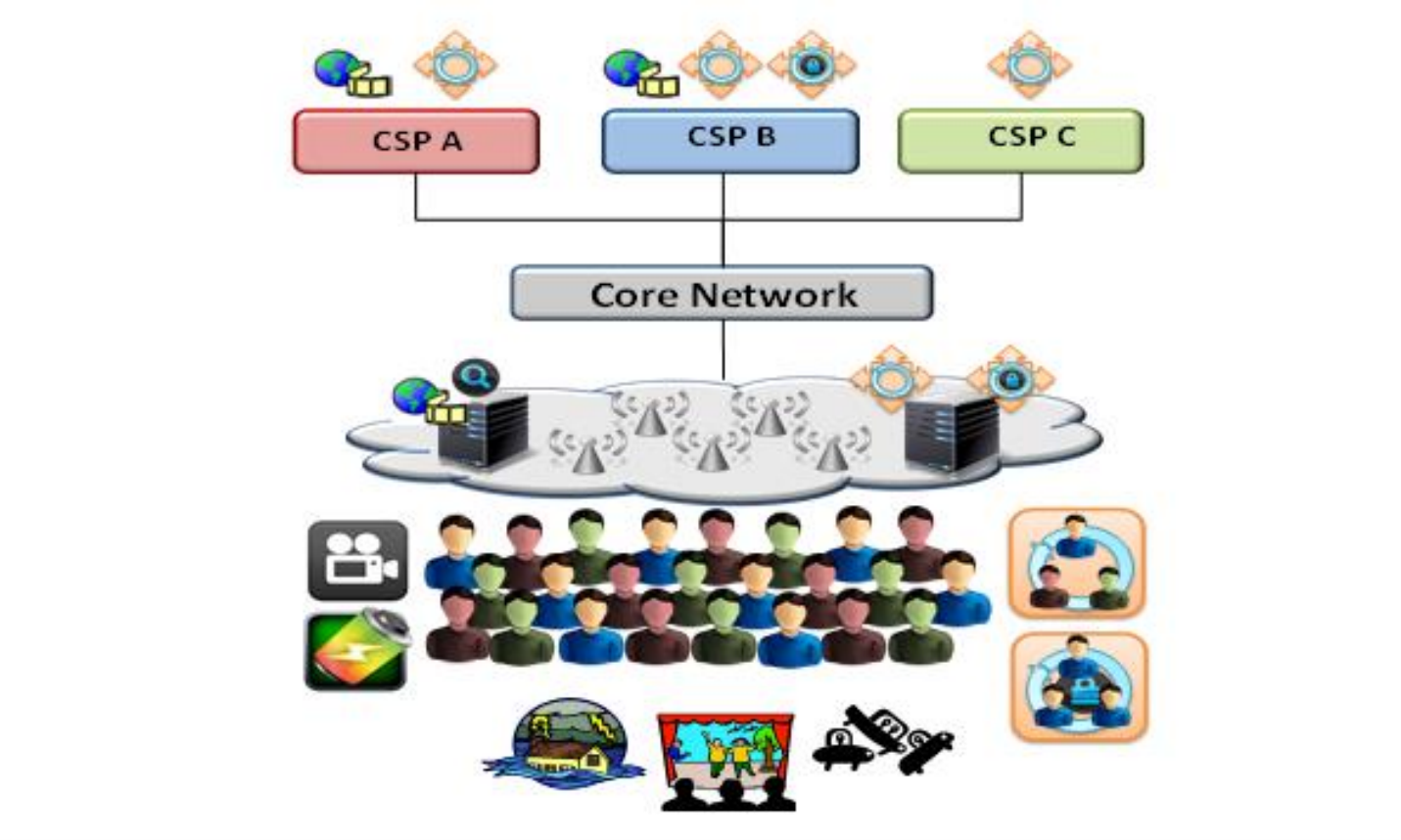

Flash crowd events

People suddenly meet around a geographic area of special interest.

- A unique CESC provider gives access to other different mobile network operators. The challenge is to manage the CESC cluster resources on a per-operator basis.

- Since the network resources have not been pre-provisioned due to the unexpected situation, the high traffic demand requires optimized Self-X coordination to cope with the multi-tenant requirements.

LTE world

- A Small Cell network capable to support more than one network operator is envisaged.
- 3GPP specifications have already added some support for Radio Access Network (RAN) sharing and Multi-Operator Core Network (MOCN), where the shared RAN is directly connected to each of the multiple operator's core networks, has been identified as the exclusive enabler for multitenancy features in SESAME platform.
- The infrastructure consists of a number of Small Cells and the corresponding SC network functions such as gateways and management systems.

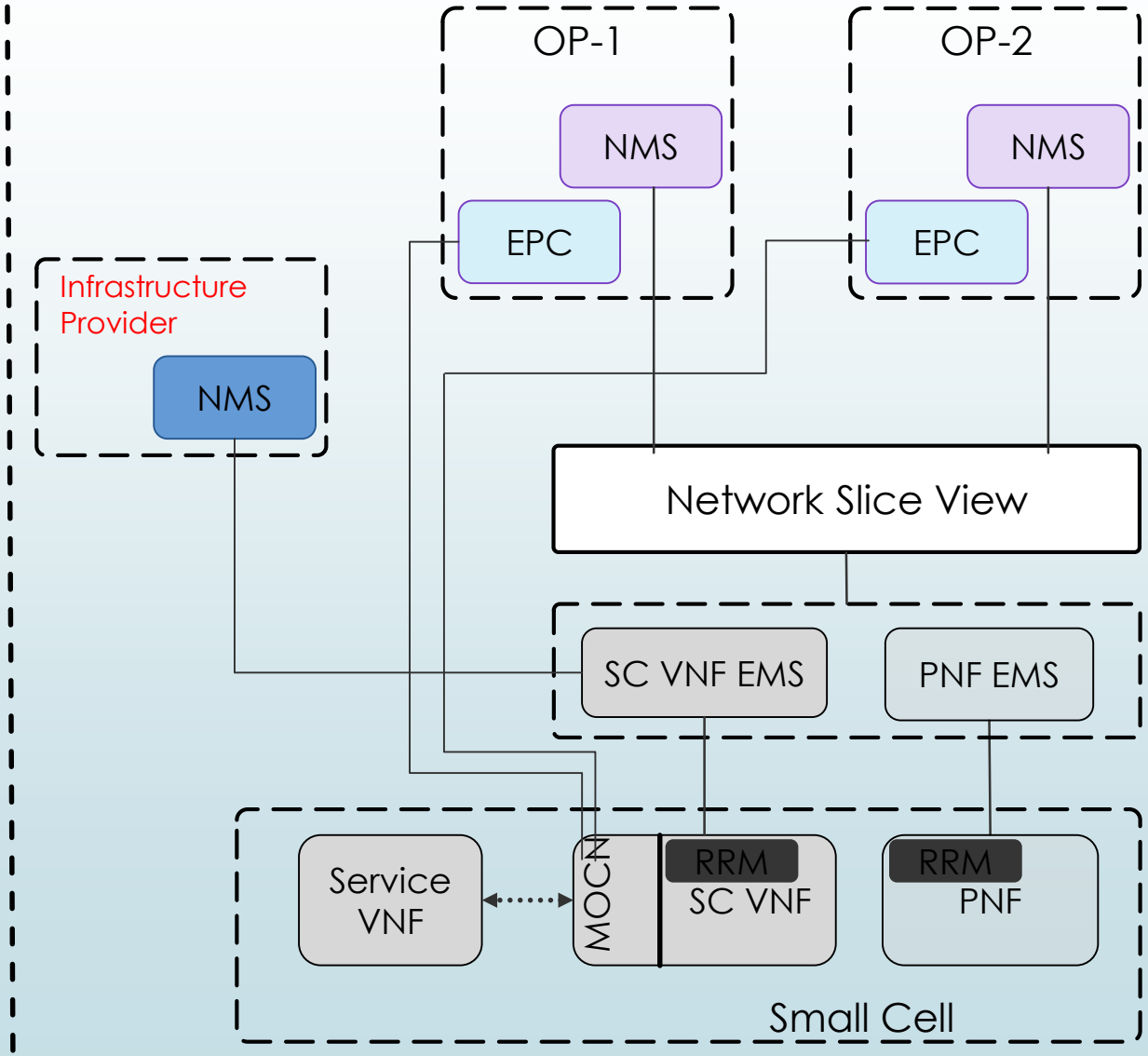

NFV world

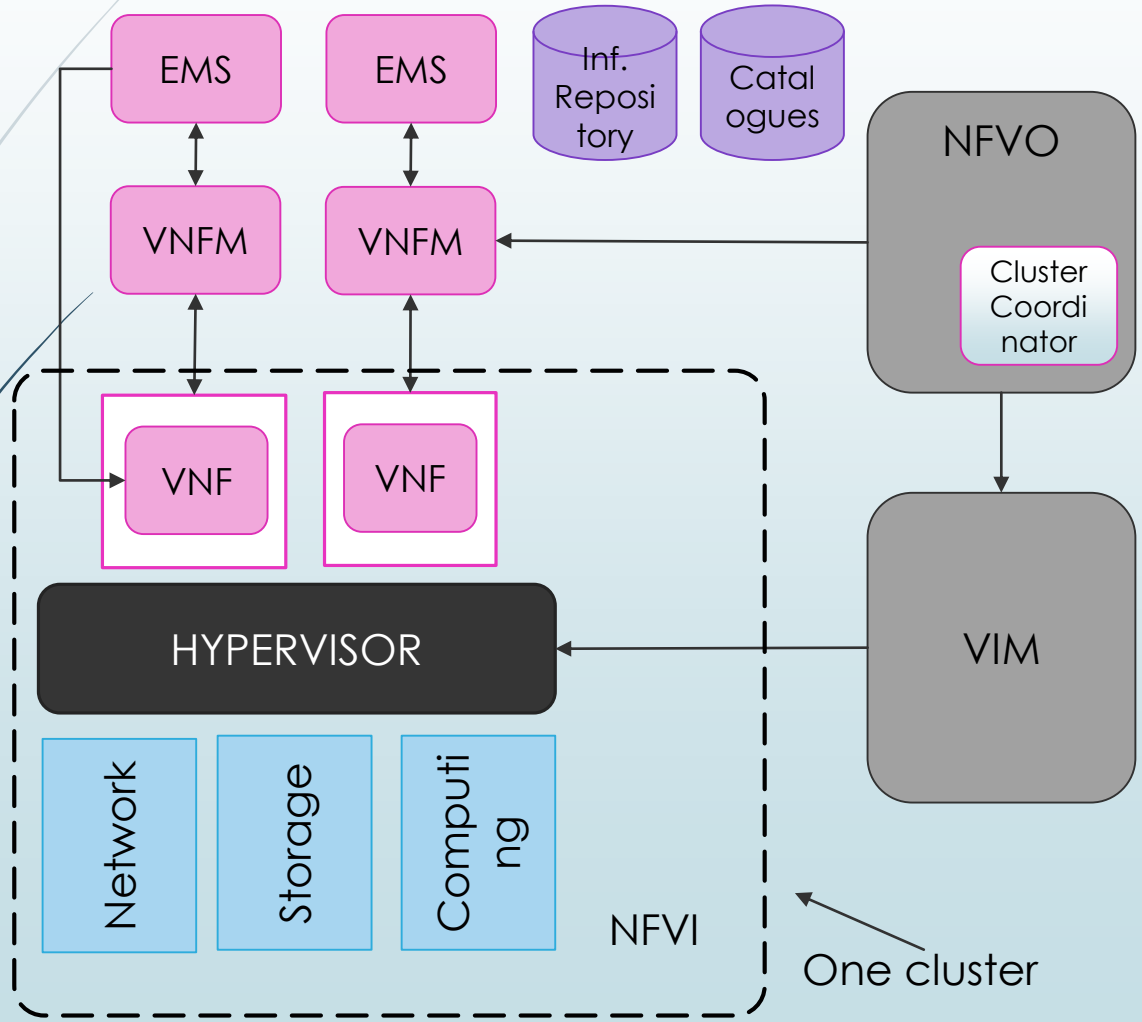

- The NFV concept is going to be used as an enabler that will offer a virtualisation platform and meet the requirements of SESAME, namely NFV-driven small cell functions and NFV-based network services.
- The figure presents the MANO framework for the NFV part.

Combined – SESAME architecture

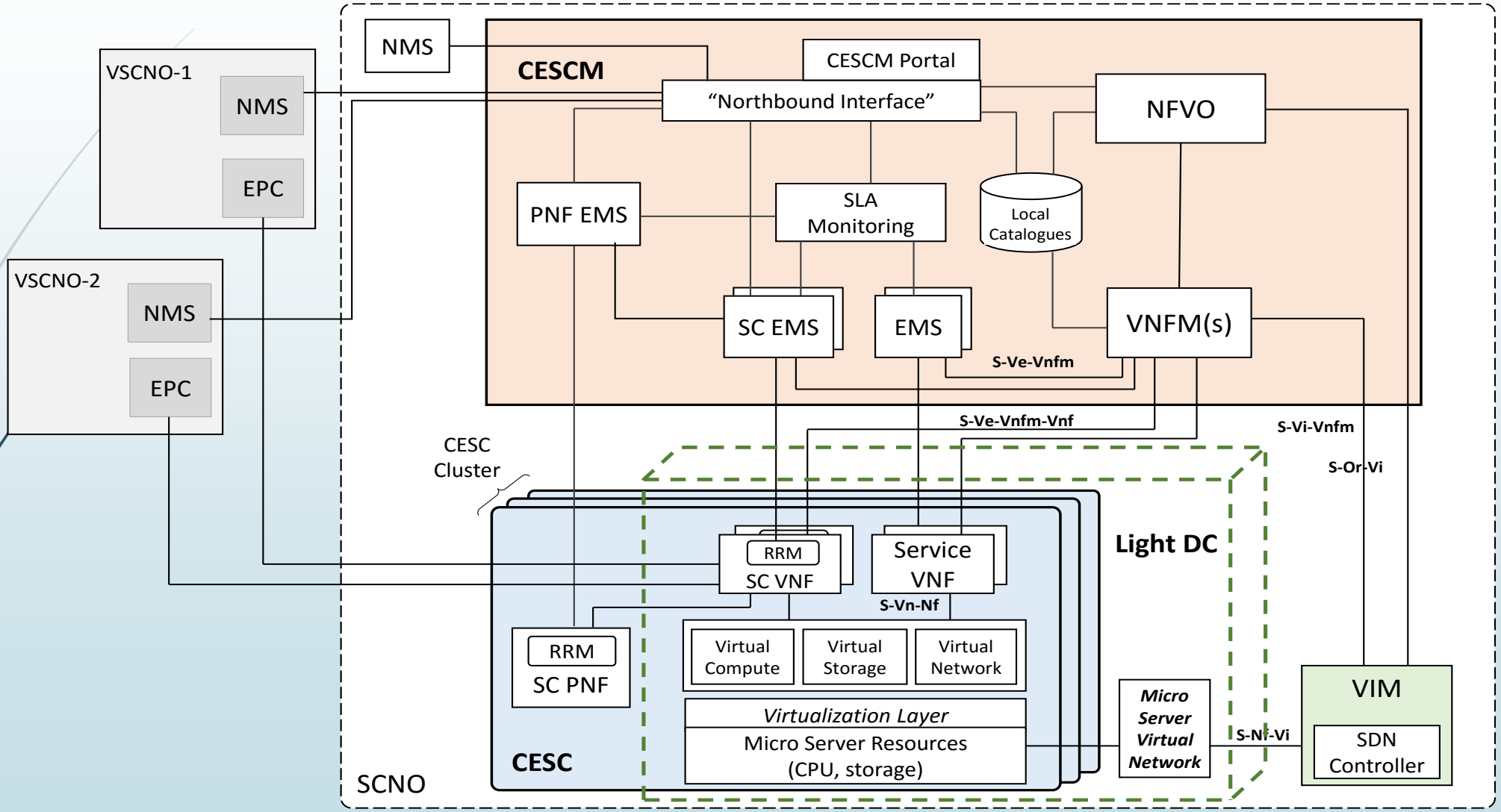

SESAME architecture

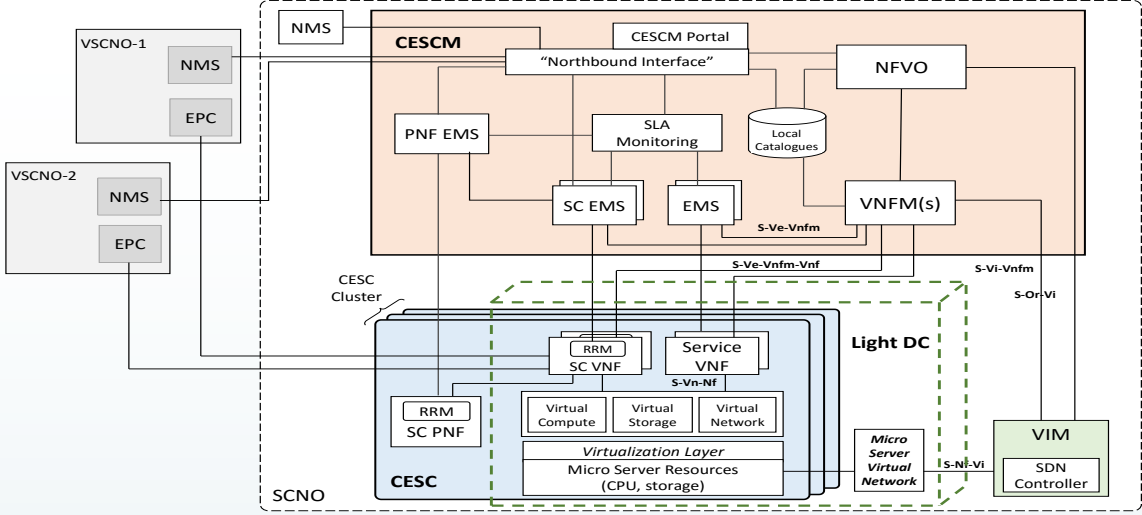

- The platform of CESCs offers computing, storage and radio resources.
- Through virtualization, the CESC cluster can be seen as a cloud of resources which can be sliced to enable multi-tenancy.
- Cloud-based processing and storage resources are provided through a virtualised execution platform.
- This execution platform is used to support the required Virtualized Network Functions (VNFs) that implement the different features/capabilities of the Small Cells (and eventually of the core network) and the cognitive management and Self-X operations,

SESAME architecture

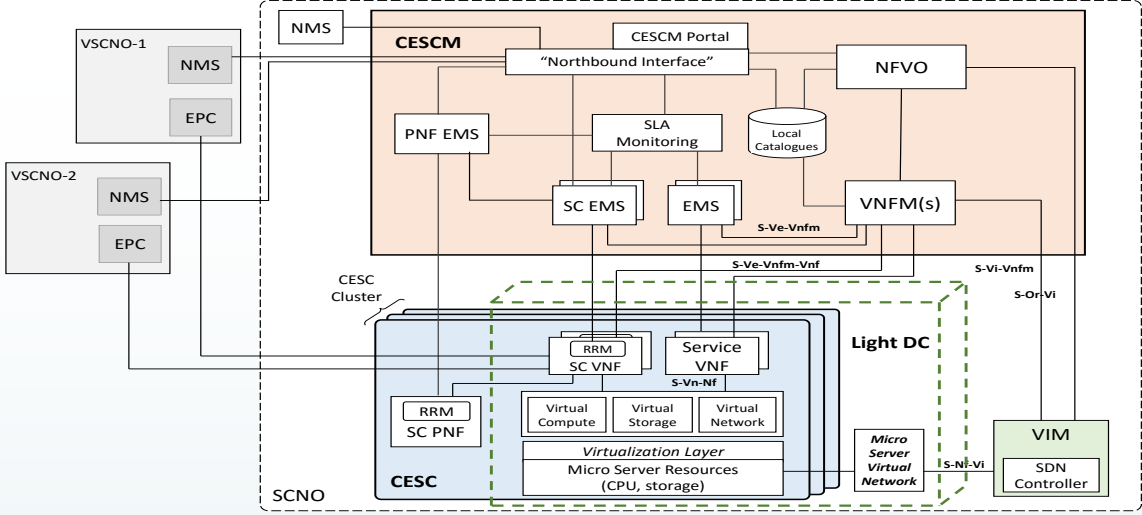

- The CESC cluster becomes a neutral host for mobile Small Cell Network Operators (SCNO) or Virtual SCNO (VSCNO) which want to share IT and network resources at the edge of the mobile network.
- Network Services are supported by VNFs hosted in the Light DC (constituted by one or more CESCs), leveraging on SDN and NFV functionalities that allow achieving an adequate level of flexibility and scalability at the cloud infrastructure edge.
- VNFs are executed as VMs inside the Light DC, which is provided with a hypervisor (based on KVM) specifically extended to support carrier grade computing and networking performance.

SESAME architecture

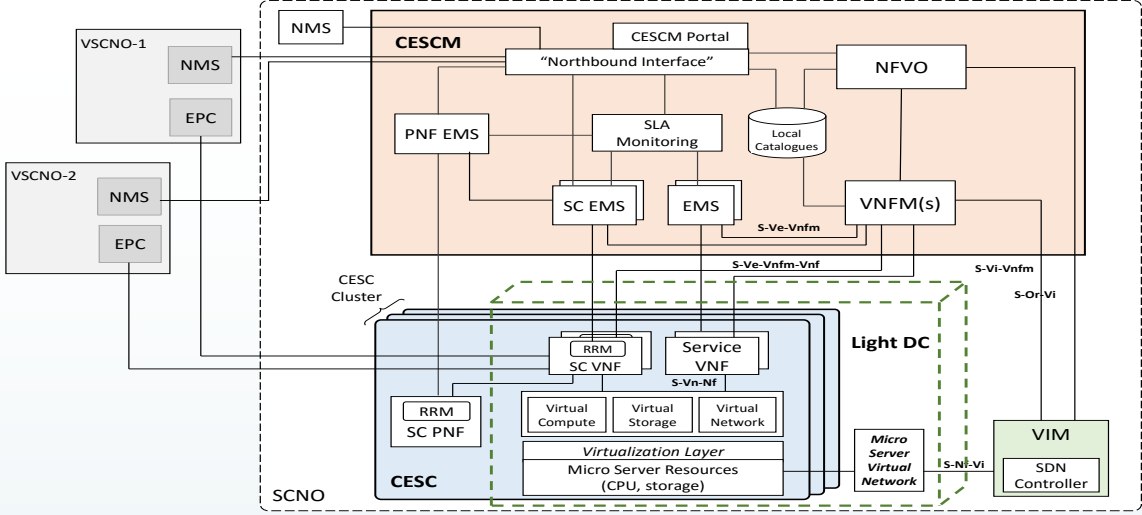

- Over the provided virtualised execution environment (Light DC), it is possible to chain different VNFs to meet a requested NS by a tenant (i.e. mobile network operator
- In our context a NS is understood as a collection of VNFs that jointly supports data transmission between User Equipment (UE) and operators' Evolved Packet Core (EPC), with the possibility to involve one or several service VNFs in the data path. Therefore, each NS is deployed as a chain of SC VNFs and Service VNFs.
- The CESC Manager (CESCM) is the central service management and orchestration component in the overall architecture figure. Generally speaking, it integrates all the necessary network management elements, traditionally suggested in 3GPP, and the novel recommended functional blocks of NFV MANO.

CESC Attributes

- The CESC exposes different views of the network resources: per-tenant small cell view, and physical small cell substrate,
- The physical small cell part is managed by the SCNO, and decouples the management of the virtual small cells from the platform itself.
- Rather than providing multiple S1 (or Iu-h interface) connections from the physical small cell to different operators' EPC network elements such as MME and SGW, such fan-out is done at the micro server.
- The CESC is further the termination of multiple S1 interfaces connecting the CESC to multiple MME/SGW entities as in S1-Flex.
- It offer the possibility to offload traffic from congested macrocells, allowing for a variety of value-added services

Small Cell PNF-VNF splitting

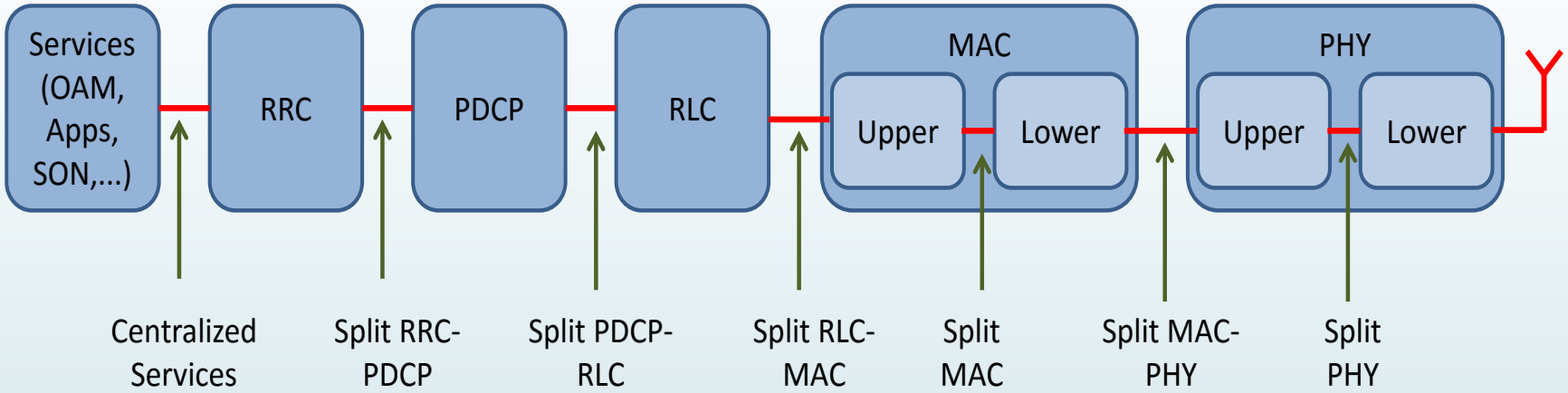

- For each functional split the analysis determines the fronthaul latency and bandwidth requirements.
- The SC PNF implements the radio interface and possibly the main protocol features of the LTE (H) eNB protocol stack
- Together with the SC VNFs, provides the complete functionality of the virtualised small cell.

Small Cell PNF-VNF splitting

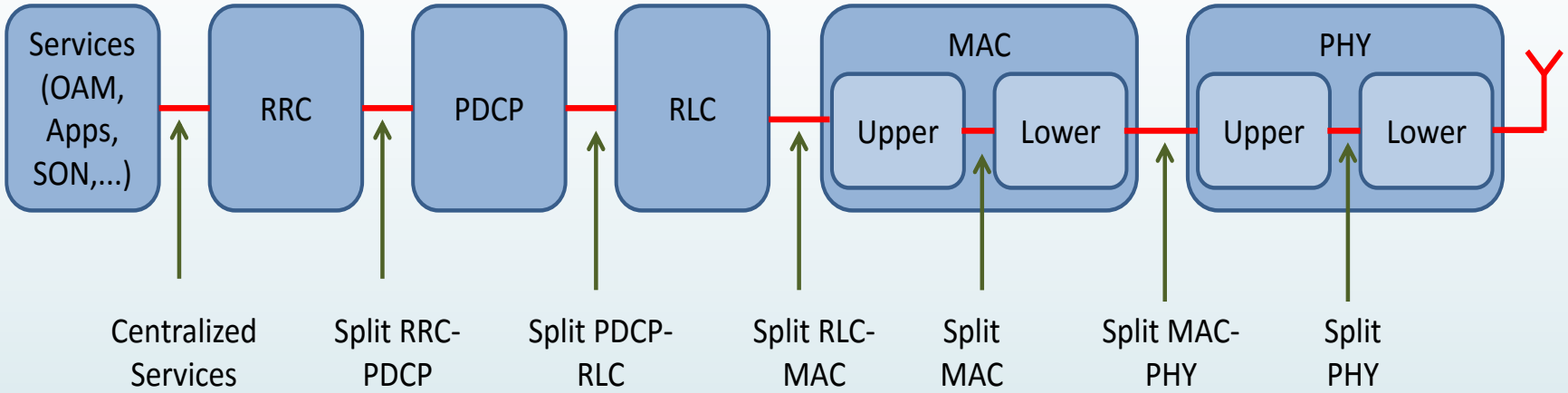

- The SC VNF is part of the small cell functions which is hosted and executed in the micro server.
- Different small cell functions are instantiated and managed in the micro server by the management and orchestration layer in the CESC Manager. The VNFs are allocated creating VMs in the micro server. Different VNFs are instantiated depending on the specific functional split,
- The functional split shall define which parts of the LTE protocol stack are implemented as VNFs. As mentioned above the virtualised small cell might include MAC, RLC and PDCP at the U-plane, whereas at the C-plane RRC functions.
- In addition, RRM and Self-x features are also implemented as VNFs in the Light DC.

Main impact areas

- Network infrastructure openness through the development of CESCs built on NFV, MEC capabilities and cognitive network management.
- Multi-tenancy and flexible cloud-network integration, with highly-predictable and flexible end-to-end performance characteristics.
- New architecture through the development of programmable mobile network infrastructures, allowing for continuous innovation by means of key functionalities exposed to CSPs.
- Decrease network management OPEX, whilst increasing QoS/QoE and security

Innovation Potential of SESAME

- SESAME envisions network neutrality, multi-tenancy whereas is not practical to densify existing networks, and places where dense concentrations of users place extreme demand.
- SESAME delivers several computational, storage and networking resources via VNFs empowered by HW accelerators. High performance required at lower costs and with lower power consumption.
- SESAME Orchestrator will build services (e.g., service function chaining, billing, or even SLA management) over multiple clusters of virtualised small cells.

To conclude…

End-users require access to service through any available spectrum, radio technology, etc.

Operators require cheaper access to providing high performance services

SESAME make it easier for service providers to host their services near the edge of the network

Thank you

- Any questions ???